420 College Street SE
Lacey, WA 98503
360-491-5642

COMMUNITY DEVELOPMENT DEPARTMENT
PRESUBMISSION CONFERENCE AGENDA

THE FOLLOWING PROJECTS WILL BE CONSIDERED AT CITY HALL, 420 COLLEGE STREET SE.

MEETING DATE: **Wednesday, September 28, 2016**

TIME	PRE-SUB-MISSION	LAND-CLEARING REVIEW	SITE PLAN REVIEW	DESCRIPTION
SPR Team Meeting will be held on the Tuesday prior to presub meeting date.				
10:00 a.m.				16-242 Hawks Prairie Phase 3 Shot Plat/Plat Amendment 119234 40000 **CANCELLED** Schelling/Stiles 6000 Butterball Ln NE LD 0-4 PW File #119-23-440000
11:00 a.m.				
12:00 p.m.				
1:30 p.m.				**16-250 Mobilitie Data Transport Poles** **Right of Way Seymour/Stiles** **1010 Sleater Kinney/1200 Galaxy/8200 Martin Way E WD/GC** **PW File #118-11-430101**
2:30 p.m.				
3:30 p.m.				

CITY OF LACEY
Community Development Department
420 College Street SE
Lacey, WA 98503
(360) 491-5642

OFFICIAL USE ONLY
CASE NUMBER: 16-250
RELATED CASE NUMBERS:
PLANNER ASSIGNED: ss
PW ASSIGNED:

PRESUBMISSION CONFERENCE REQUEST FORM

ONE WEEK PRIOR TO REQUESTED DATE, SUBMIT VIA EMAIL TO PLANNING@CI.LACEY.WA.US, OR TO LACEY CITY HALL. NO FEE IS REQUIRED. SUBMISSION SHOULD INCLUDE COMPLETED APPLICATION, SITE PLAN DRAWING, VICINITY MAP, AND TRAFFIC GENERATION WORKSHEET.

APPLICANT: Jason Verduzco, Permitting Manager

ADDRESS: 2955 Red Hill Avenue CITY: Costa Mesa STATE: CA ZIP: 92627

PHONE NUMBER: 509-290-4472 EMAIL: jverduzco@mobilitie.com

REPRESENTATIVE: Same

ADDRESS: CITY: STATE: ZIP:

PHONE NUMBER: EMAIL:

PROJECT ADDRESS: (3) data transport utility poles, all located in public street ROW, all within Lacey city limits.

ASSESSOR'S TAX PARCEL NUMBER(S): NA: (1) Near 1010 Sleater Kinney Rd., SE; (2) Near 1200 Galaxy Dr NE; (3) Near 8200 Martin Way E.

BRIEF DESCRIPTION OF PROJECT: These 3 sites listed above are data transport poles, to "transport" data wirelessly to neighboring sites (alternative to traditional underground fiber lines).

TOTAL ACREAGE: NA, minimal TOTAL SQ. FT OF BLDG: NA ZONING: Gen Comm (All Sites)

PROPOSED LAND USE: ( ) SINGLE-FAMILY ( ) MULTI-FAMILY ( ) INDUSTRIAL DUPLEX ( ) COMMERCIAL ( ) M.H. PARK

EXISTING ACCESS: Street and sidewalk PROPOSED ACCESS: same

INDICATE PREFERENCE FOR A MEETING DATE AND TIME:

(MEETINGS ARE HELD THE 2ND AND 4TH WEDNESDAY OF EACH MONTH) DATE: 9/28/2016 TIME: 1st Available

A presubmission conference is an opportunity for the developer and/or their representative to meet with staff to discuss preliminary studies or sketches of the proposed project. At the conference, staff will make available, pertinent information relating to the proposed development. The intent is to identify and/or eliminate as many potential problems as possible in order for the project to be processed without delay. The conference should take place prior to detailed work by an engineer or surveyor; however, the site drawing submitted, should have sufficient information to allow for staff review. Discussion topics will include such things as Comprehensive Plan, Street Plan, Storm Run Off & Retention, Shoreline Master Program, Zoning, Availability of Water/Sewer, Development Concepts, other requirements and permits, and the environmental impact. If the applicant owns adjacent land, the possibilities of future development will be discussed. Written information regarding process, specific requirements & related issues, will be furnished at the meeting. Staff will typically visit the site prior to the meeting and may enter the property if deemed necessary to gain a full understanding of the project.

mobilitie®
intelligent infrastructure

SITE ID: 9WAB001600A

SITE LOCATION:

8200 MARTIN WAY E. LACEY, WA 98516
MARTIN WAY E. & MARVIN RD. NE.

NEW UTILITY WOOD POLE

811 Dig Alert
Know what's below. Call before you dig.
WASHINGTON
Call Two Working Days Before You Dig!
1-800-STAKE IT

DO NOT SCALE DRAWINGS

SUBCONTRACTOR SHALL VERIFY ALL PLANS, EXISTING DIMENSIONS & FIELD CONDITIONS ON THE JOB SITE & SHALL IMMEDIATELY NOTIFY THE ENGINEER IN WRITING OF ANY DISCREPANCIES BEFORE PROCEEDING WITH THE WORK OR BE RESPONSIBLE FOR SAME.

GENERAL NOTES

THE FACILITY IS NOT FOR HUMAN HABITATION. A TECHNICIAN WILL VISIT THE SITE AS REQUIRED FOR ROUTINE MAINTENANCE. THE PROJECT WILL NOT RESULT IN ANY SIGNIFICANT DISTURBANCE OR EFFECT ON DRAINAGE; NO SANITARY SEWER SERVICE, POTABLE WATER, OR TRASH DISPOSAL IS REQUIRED AND NO COMMERCIAL SIGNAGE IS NEW.

SITE INFORMATION

APPLICANT:	MOBILITIE
APPLICANT ADDRESS:	2955 RED HILL AVENUE, STE. 200, COSTA MESA, CA 92626
PUBLIC ROW/PRIVATE PROPERTY:	PUBLIC ROW
NEAREST ADDRESS:	8200 MARTIN WAY E. LACEY, WA 98516
NEAREST APN(S):	118-114-301-02
SITE LATITUDE:	47°03'23.4" N (47.056502)
SITE LONGITUDE:	-122°45'59.5" W (-122.766526)
GIS TYPE:	CA83VF (NAD83)
GROUND ELEVATION:	±63 AMSL
COUNTY:	THURSTON COUNTY
JURISDICTION:	LACEY CITY

PROJECT TEAM

MOBILITIE, LLC
2955 RED HILL AVENUE, STE. 200,
COSTA MESA, CA 92626
APPLICANT: JUSTIN WALLEY
PHONE: 949-584-0704
EMAIL: justin.walley@itbutility.com

XD INDUSTRIES
1572 N. BATAVIA ST. SUITE 1D
ORANGE, CA 92876
CONTACT: JOSE FRIAS
PHONE: 714.947.3093
EMAIL: jfrias@xd-ind.com

LOCATION MAPS

VICINITY MAP

SITE LOCATION

PROJECT DESCRIPTION

MOBILITIE PROPOSES TO CONSTRUCT A NEW MINI-MACRO WIRELESS FACILITY WITHIN THE (E) RIGHT OF WAY. THE SCOPE WILL CONSIST OF THE FOLLOWING:

- INSTALL ONE (1) 72'-0" UTILITY WOOD POLE
- INSTALL ONE (1) OMNI-DIRECTIONAL ANTENNA
- INSTALL ONE (1) UE RELAY
- INSTALL ONE (1) GPS ANTENNA
- INSTALL ONE (1) REMOTE RADIO HEAD
- INSTALL ONE (1) AC DISTRIBUTION PANEL
- INSTALL ONE (1) METER SOCKET
- INSTALL ONE (1) NEMA-3R DISCONNECT SWITCH
- INSTALL TWO (2) QUAZITE BOX

ENGINEERING

- 2012 INTERNATIONAL BUILDING CODE
- 2014 NATIONAL ELECTRICAL CODE
- TIA/EIA-222-G-2 OR LATEST EDITION
- LOCAL BUILDING/PLANNING CODE

DRAWING INDEX

SHEET NO:	SHEET TITLE
T-1	TITLE SHEET
T-2	GENERAL NOTES
T-3	GENERAL NOTES
A-1	SITE PLANS
A-2	NORTHEAST & SOUTHWEST ELEVATIONS
D-1	DETAILS
D-2	DETAILS
E-1	ELECTRICAL PLAN
G-1	GROUNDING PLAN
TC-1	TRAFFIC CONTROL PLANS
TC-2	TRAFFIC CONTROL PLANS

mobilitie®
intelligent infrastructure

MOBILITIE, LLC

DRAWN BY:	V.C.
DATE:	07/14/2016

REV	DATE	DESCRIPTION	BY
0	07/14/2016	90% CONSTRUCTION	V.C.

PRELIMINARY NOT FOR CONSTRUCTION

IT IS A VIOLATION OF LAW FOR ANY PERSON, UNLESS THEY ARE ACTING UNDER THE DIRECTION OF A LICENSED PROFESSIONAL ENGINEER, TO ALTER THIS DOCUMENT.

SITE ID:
9WAB001600A
8200 MARTIN WAY E. LACEY, WA 98516 ,
MARTIN WAY E. & MARVIN RD. NE.

NEW UTILITY WOOD POLE

SHEET TITLE

TITLE SHEET

SHEET NUMBER

T-1

GENERAL CONSTRUCTION NOTES

1. ALL WORK SHALL CONFORM TO THE REQUIREMENTS OF THE LOCAL BUILDING CODE, THE LATEST EDITION AND ALL OTHER APPLICABLE CODES AND ORDINANCES.
2. CONTRACTOR SHALL CONSTRUCT SITE IN ACCORDANCE WITH THESE DRAWINGS AND CONSTRUCTION SPECIFICATIONS 80-T1196-1 REV H. THE SPECIFICATION IS THE RULING DOCUMENT AND ANY DISCREPANCIES BETWEEN THE SPECIFICATION AND THESE DRAWINGS SHOULD BE BROUGHT TO THE ATTENTION OF THE ENGINEER PRIOR TO PROCEEDING WITH CONSTRUCTION
3. CONTRACTOR SHALL VISIT THE JOB SITE AND SHALL FAMILIARIZE HIMSELF WITH ALL CONDITIONS AFFECTING THE PROPOSED WORK AND SHALL MAKE PROVISIONS AS TO THE COST THEREOF. CONTRACTOR SHALL BE RESPONSIBLE FOR FAMILIARIZING HIMSELF WITH ALL CONTRACT DOCUMENTS, FIELD CONDITIONS AND DIMENSIONS AND CONFIRMING THAT THE WORK MAY BE ACCOMPLISHED AS SHOWN PRIOR TO PROCEEDING WITH CONSTRUCTION. ANY DISCREPANCIES SHALL BE BROUGHT TO THE ATTENTION OF THE ENGINEER PRIOR TO THE COMMENCEMENT OF WORK. NO COMPENSATION WILL BE AWARDED BASED ON CLAIM OF LACK OF KNOWLEDGE OF FIELD CONDITIONS
4. PLANS ARE NOT TO BE SCALED. THESE PLANS ARE INTENDED TO BE A DIAGRAMMATIC OUTLINE ONLY UNLESS OTHERWISE NOTED. THE WORK SHALL INCLUDE FURNISHING MATERIALS, EQUIPMENT AND APPURTENANCES, AND LABOR NECESSARY TO EFFECT ALL INSTALLATIONS AS INDICATED ON THE DRAWINGS. OWNER PROVIDED MATERIALS WILL INCLUDE THE FOLLOWING, UNLESS NOTED OTHERWISE:
   A) TRANSMITTER
   B) RF FILTER
   C) HOSE AND HOSE MANIFOLDS (ANY COPPER OR STEEL SECTIONS PROVIDE BY CONTRACTOR)
   D) UHF ANTENNA AND MOUNTING BRACKETS, GPS ANTENNAS AND KU ANTENNAS
   E) UHF COAX AND HANGERS
   F) 480-208 & 208-400 ELECTRICAL TRANSFORMERS (RE: E-2 FOR SPECIALIZED TRANSFORMERS PROVIDED BY CONTRACTOR)
   G) AUTOMATIC TRANSFER SWITCH AND GENERATOR
   H) EQUIPMENT SHELTER (SHELTERS FURNISHED IN FACTORY W/ HVAC EQUIPMENT AND ELECTRICAL DISTRIBUTION PANEL)
   I) INTEGRATED LOAD CENTER
5. DIMENSIONS SHOWN ARE TO FINISH SURFACES UNLESS OTHERWISE NOTED. SPACING BETWEEN EQUIPMENT IS REQUIRED CLEARANCE. THEREFORE, IT IS CRITICAL TO FIELD VERIFY DIMENSIONS, SHOULD THERE BE ANY QUESTIONS REGARDING THE CONTRACT DOCUMENTS, EXISTING CONDITIONS AND/OR DESIGN INTENT, THE CONTRACTOR SHALL BE RESPONSIBLE FOR OBTAINING THE WORK.
6. DETAILS ARE INTENDED TO SHOW DESIGN INTENT. MODIFICATIONS MAY BE REQUIRED TO SUIT JOB DIMENSIONS OR CONDITIONS, AND SUCH MODIFICATIONS SHALL BE INCLUDED AS PART OF THE WORK.
7. CONTRACTOR SHALL RECEIVE CLARIFICATION IN WRITING, AND SHALL RECEIVE IN WRITING AUTHORIZATION TO PROCEED BEFORE STARTING WORK ON ANY ITEMS NOT CLEARLY DEFINED OR IDENTIFIED BY THE CONTRACT DOCUMENTS.
8. CONTRACTOR SHALL SUPERVISE AND DIRECT THE WORK USING THE BEST CONSTRUCTION SKILLS AND ATTENTION. CONTRACTOR SHALL BE SOLELY RESPONSIBLE FOR CONSTRUCTION MEANS, METHODS, TECHNIQUES, SEQUENCES AND PROCEDURES AND FOR COORDINATING ALL PORTIONS OF THE WORK UNDER CONTRACT, UNLESS OTHERWISE NOTED.
9. CONTRACTOR SHALL BE RESPONSIBLE FOR THE SAFETY OF THE WORK AREA, ADJACENT AREAS AND BUILDING OCCUPANTS THAT ARE LIKELY TO BE AFFECTED BY THE WORK UNDER THIS CONTRACT. WORK SHALL CONFORM TO ALL OSHA REQUIREMENTS.
10. CONTRACTOR SHALL COORDINATE HIS WORK WITH THE SUPERINTENDENT OF BUILDINGS & GROUNDS AND SCHEDULE HIS ACTIVITIES AND WORKING HOURS IN ACCORDANCE WITH THE REQUIREMENTS.
11. CONTRACTOR SHALL BE RESPONSIBLE FOR COORDINATING HIS WORK WITH THE WORK OF OTHERS AS IT MAY RELATE TO RADIO EQUIPMENT, ANTENNAS AND ANY OTHER PORTIONS OF THE WORK.
12. INSTALL ALL EQUIPMENT AND MATERIALS IN ACCORDANCE WITH MANUFACTURERS RECOMMENDATIONS UNLESS SPECIFICALLY OTHERWISE INDICATED OR WHERE LOCAL CODES OR REGULATIONS TAKE PRECEDENCE.
13. MAKE NECESSARY PROVISIONS TO PROTECT EXISTING SURFACES, EQUIPMENT, IMPROVEMENTS, PIPING ETC. AND IMMEDIATELY REPAIR ANY DAMAGE THAT OCCURS DURING CONSTRUCTION.
14. IN DRILLING HOLES INTO CONCRETE WHETHER FOR FASTENING OR ANCHORING PURPOSES, OR PENETRATIONS THROUGH THE FLOOR FOR CONDUIT RUNS, PIPE RUNS, ETC., MUST BE CLEARLY UNDERSTOOD THAT REINFORCING STEEL SHALL NOT BE DRILLED INTO, CUT OR DAMAGED UNDER ANY CIRCUMSTANCES (UNLESS NOTED OTHERWISE). LOCATIONS OF REINFORCING STEEL ARE NOT DEFINITELY KNOWN AND THEREFORE MUST BE SEARCHED FOR BY APPROPRIATE METHODS AND EQUIPMENT.
15. REPAIR ALL EXISTING WALL SURFACES DAMAGED DURING CONSTRUCTION SUCH THAT THEY MATCH AND BLEND IN WITH ADJACENT SURFACES.
16. SEAL PENETRATIONS THROUGH FIRE RATED AREAS WITH U.L. LISTED AND FIRE CODE APPROVED MATERIALS.
17. KEEP CONTRACT AREA CLEAN, HAZARD FREE, AND DISPOSE OF ALL DIRT, DEBRIS, AND RUBBISH. EQUIPMENT NOT SPECIFIED AS REMAINING ON THE PROPERTY OF THE OWNER SHALL BE REMOVED. LEAVE PREMISES IN CLEAN CONDITION AND FREE FROM PAINT SPOTS, DUST, OR SMUDGES OF ANY NATURE. CONTRACTOR SHALL BE RESPONSIBLE FOR MAINTAINING ALL ITEMS UNTIL COMPLETION OF CONSTRUCTION.
18. MINIMUM BEND RADIUS OF ANTENNA CABLES SHALL BE IN ACCORDANCE WITH CABLE MANUFACTURERS RECOMMENDATIONS.
19. ALL EXISTING INACTIVE SEWER, WATER, GAS, ELECTRIC AND OTHER UTILITIES, WHICH INTERFERE WITH THE EXECUTION OF THE WORK, SHALL BE REMOVED AND/OR CAPPED, PLUGGED OR OTHERWISE DISCONTINUED AT POINTS WHICH WILL NOT INTERFERE WITH THE EXECUTION OF THE WORK, SUBJECT TO APPLICABLE REGULATORY AUTHORITIES
20. CONTRACTOR SHALL MINIMIZE DISTURBANCE TO EXISTING SITE DURING CONSTRUCTION. EROSION CONTROL MEASURES, IF REQUIRED DURING CONSTRUCTION SHALL BE IN CONFORMANCE WITH JURISDICTIONAL OR STATE AND LOCAL GUIDELINES FOR EROSION AND SEDIMENT CONTROL AND COORDINATED WITH LOCAL REGULATORY AUTHORITIES.
21. ALL CONSTRUCTION IS TO ADHERE TO APPLICANT'S INTEGRATED CONSTRUCTION STANDARDS UNLESS STATE CODE IS MORE STRINGENT.
22. THE INTENT OF THE PLANS AND SPECIFICATIONS IS TO PERFORM THE CONSTRUCTION IN ACCORDANCE PER STATE BUILDING STANDARDS CODE, TITLES 19 AND 24, STATE CODE OF REGULATIONS. SHOULD ANY CONDITIONS DEVELOP NOT COVERED BY THE APPROVED PLANS AND SPECIFICATIONS WHEREIN THE FINISHED WORK WILL NOT COMPLY PER STATE CODE OF REGULATIONS, A CHANGE ORDER DETAILING AND SPECIFYING THE REQUIRED WORK SHALL BE SUBMITTED TO AND APPROVED BY THE JURISDICTION BEFORE PROCEEDING WITH THE WORK.

ELECTRICAL NOTES

1. ELECTRICAL CONTRACTOR SHALL SUPPLY AND INSTALL ANY/ALL ELECTRICAL WORK INDICATED. ANY/ALL CONSTRUCTION SHALL BE IN ACCORDANCE W/DRAWINGS AND ANY/ALL APPLICABLE SPECIFICATIONS. IF ANY PROBLEMS ARE ENCOUNTERED BY COMPLYING WITH THESE REQUIREMENTS, CONTRACTOR SHALL NOTIFY 'CONSTRUCTION MANAGER' AS SOON AS POSSIBLE, AFTER THE DISCOVERY OF THE PROBLEMS, AND SHALL NOT PROCEED WITH THAT PORTION OF WORK, UNTIL THE 'CONSTRUCTION MANAGER' HAS DIRECTED THE CORRECTIVE ACTIONS TO BE TAKEN.
2. ELECTRICAL CONTRACTOR SHALL VISIT THE JOB SITE AND FAMILIARIZE HIMSELF WITH ANY/ALL CONDITIONS AFFECTING ELECTRICAL AND COMMUNICATION INSTALLATION AND MAKE PROVISIONS AS TO THE COST THEREOF. ALL EXISTING CONDITIONS OF ELECTRICAL EQUIP., LIGHT FIXTURES, ETC., THAT ARE PART OF THE FINAL SYSTEM, SHALL BE VERIFIED BY THE CONTRACTOR, PRIOR TO THE SUBMITTING OF HIS BID. FAILURE TO COMPLY WITH THIS PARAGRAPH WILL IN NO WAY RELIEVE CONTRACTOR OF PERFORMING ALL WORK NECESSARY FOR A COMPLETE AND WORKING SYSTEM.
3. ALL WORK SHALL BE PERFORMED IN ACCORDANCE WITH THE LATEST EDITION OF THE NEC AND ALL CODES AND LOCAL ORDINANCES OF THE LOCAL POWER & TELEPHONE COMPANIES HAVING JURISDICTION AND SHALL INCLUDE BUT NOT BE LIMITED TO:
   C - NATIONAL FIRE CODES
   A. UL - UNDERWRITERS LABORATORIES
   B. NEC - NATIONAL ELECTRICAL CODE
   C. NEMA - NATIONAL ELECTRICAL MANUFACTURERS ASSOC.
   D. OSHA - OCCUPATIONAL SAFETY AND HEALTH ACT
   E. SBC - STANDARD BUILDING CODE
4. DO NOT SCALE ELECTRICAL DRAWINGS, REFER TO SITE PLANS AND ELEVATIONS FOR EXACT LOCATIONS OF ALL EQUIPMENT, AND CONFIRM WITH 'CONSTRUCTION MANAGER' ANY SIZES AND LOCATIONS WHEN NEEDED.
5. EXISTING SERVICES: CONTRACTOR SHALL NOT INTERRUPT EXISTING SERVICES WITHOUT WRITTEN PERMISSION OF THE OWNER.
6. CONTRACTOR SHALL PAY FOR ANY/ALL PERMITS, FEES, INSPECTIONS AND TESTING. CONTRACTOR IS TO OBTAIN PERMITS AND APPROVED SUBMITTALS PRIOR TO THE WORK BEGINNING OR ORDERING EQUIPMENT.
7. THE TERM "PROVIDE" USED IN CONSTRUCTION DOCUMENTS AND SPECIFICATIONS, INDICATES THAT THE CONTRACTOR SHALL FURNISH AND INSTALL.
8. CONTRACTOR SHALL CONFIRM WITH LOCAL UTILITY COMPANY ANY/ALL REQUIREMENTS SUCH AS THE: LUG SIZE RESTRICTIONS, CONDUIT ENTRY, SIZE OF TRANSFORMERS, SCHEDULED DOWNTIME FOR THE OWNERS' CONFIRMATION, ETC... ANY/ALL CONFLICTS SHALL BE BROUGHT TO THE ATTENTION OF THE CONSTRUCTION MANAGER, PRIOR TO BEGINNING ANY WORK.
9. MINIMUM WIRE SIZE SHALL BE #12 AWG, NOT INCLUDING CONTROL WIRING, UNLESS NOTED OTHERWISE. ALL CONDUCTORS SHALL BE COPPER WITH THWN INSULATION.
10. OUTLET BOXES SHALL BE PRESSED STEEL IN DRY LOCATIONS, CAST ALLOY WITH THREADED HUBS IN WET/DAMP LOCATIONS AND SPECIAL ENCLOSURES FOR OTHER CLASSIFIED AREAS.
11. IT IS NOT THE INTENT OF THESE PLANS TO SHOW EVERY MINOR DETAIL OF THE CONSTRUCTION. CONTRACTOR IS EXPECTED TO FURNISH AND INSTALL ALL ITEMS FOR A COMPLETE ELECTRICAL SYSTEM AND PROVIDE ALL REQUIREMENTS FOR THE EQUIPMENT TO BE PLACED IN PROPER WORKING ORDER.
12. ELECTRICAL SYSTEM SHALL BE AS COMPLETELY AND EFFECTIVELY GROUNDED, AS REQUIRED BY SPECIFICATIONS, SET FORTH BY APPLICANT.
13. ALL WORK SHALL BE PERFORMED BY A LICENSED ELECTRICAL CONTRACTOR IN A FIRST CLASS, WORKMANLIKE MANNER. THE COMPLETED SYSTEM SHALL BE FULLY OPERATIVE AND SUBJECT TO REGULATORY INSPECTION AND APPROVAL BY CONSTRUCTION MANAGER.
14. ALL WORK SHALL BE COORDINATED WITH OTHER TRADES TO AVOID INTERFERENCE WITH THE PROGRESS OF CONSTRUCTION.
15. CONTRACTOR SHALL GUARANTEE ANY/ALL MATERIALS AND WORK FREE FROM DEFECTS FOR A PERIOD OF NOT LESS THAN ONE YEAR FROM DATE OF ACCEPTANCE.
16. THE CORRECTION OF ANY DEFECTS SHALL BE COMPLETED WITHOUT ANY ADDITIONAL CHARGE AND SHALL INCLUDE THE REPLACEMENT OR THE REPAIR OF ANY OTHER PHASE OF THE INSTALLATION, WHICH MAY HAVE BEEN DAMAGED THEREIN.
17. ADEQUATE AND REQUIRED LIABILITY INSURANCE SHALL BE PROVIDED FOR PROTECTION AGAINST PUBLIC LOSS AND ANY/ALL PROPERTY DAMAGE FOR THE DURATION OF WORK.
18. PROVIDE AND INSTALL CONDUIT, CONDUCTORS, PULL WIRES, BOXES, COVER PLATES AND DEVICES FOR ALL OUTLETS AS INDICATED.
19. DITCHING AND BACK FILL: CONTRACTOR SHALL PROVIDE FOR ALL UNDERGROUND INSTALLED CONDUIT AND/OR CABLES INCLUDING EXCAVATION AND BACKFILLING AND COMPACTION. REFER TO NOTES AND REQUIREMENTS 'EXCAVATION, AND BACKFILLING.
20. MATERIALS, PRODUCTS AND EQUIPMENT, INCLUDING ALL COMPONENTS THEREOF, SHALL BE NEW AND SHALL APPEAR ON THE LIST OF U.L. APPROVED ITEMS AND SHALL MEET OR EXCEED THE REQUIREMENTS OF THE NEC, NEMA AND IECE.
21. CONTRACTOR SHALL SUBMIT SHOP DRAWINGS OR MANUFACTURES CATALOG INFORMATION OF ANY/ALL LIGHTING FIXTURES, SWITCHES AND ALL OTHER ELECTRICAL ITEMS FOR APPROVAL BY THE CONSTRUCTION MANAGER PRIOR TO INSTALLATION.
22. ANY CUTTING OR PATCHING DEEMED NECESSARY FOR ELECTRICAL WORK IS THE ELECTRICAL CONTRACTORS RESPONSIBILITY AND SHALL BE INCLUDED IN THE COST FOR WORK AND PERFORMED TO THE SATISFACTION OF THE 'CONSTRUCTION MANAGER' UPON FINAL ACCEPTANCE.
23. THE ELECTRICAL CONTRACTOR SHALL LABEL ALL PANELS WITH ONLY TYPEWRITTEN DIRECTORIES. ALL ELECTRICAL WIRING SHALL BE THE RESPONSIBILITY OF THE ELECTRICAL CONTRACTOR.
24. DISCONNECT SWITCHES SHALL BE H.P. RATED HEAVY-DUTY, QUICK-MAKE AND QUICK-BREAK ENCLOSURES, AS REQUIRED BY EXPOSURE TYPE.
25. ALL CONNECTIONS SHALL BE MADE WITH A PROTECTIVE COATING OF AN ANTI-OXIDE COMPOUND SUCH AS "NO-OXIDE A" BY DEARBORNE CHEMICAL CO. COAT ALL WIRE SURFACES BEFORE CONNECTING. EXPOSED COPPER SURFACES, INCLUDING GROUND BARS, SHALL BE TREATED - NO SUBSTITUTIONS.
26. RACEWAYS: CONDUIT SHALL BE SCHEDULE 80 PVC MEETING OR EXCEEDING NEMA TC2 - 1990. CONTRACTOR SHALL PLUG AND CAP EACH END OF SPARE AND EMPTY CONDUITS AND PROVIDE TWO SEPARATE PULL STRINGS - 200 LBS TEST POLYETHYLENE CORD. ALL CONDUIT BENDS SHALL BE A MINIMUM OF 2 FT. RADIUS. RGS CONDUITS WHEN SPECIFIED, SHALL MEET UL-6 FOR GALVANIZED STEEL. ALL FITTINGS SHALL BE SUITABLE FOR USE WITH THREADED RIGID CONDUIT. COAT ALL THREADS WITH 'BRITE ZINC' OR 'COLD GALV'.
27. SUPPORT OF ALL ELECTRICAL WORK SHALL BE AS REQUIRED BY NEC.
28. CONDUCTORS: CONTRACTOR SHALL USE 98% CONDUCTIVITY COPPER WITH TYPE THWN INSULATION, 600 VOLT, COLOR CODED. USE SOLID CONDUCTORS FOR WIRE UP TO AND INCLUDING NO. 8 AWG. USE STRANDED CONDUCTORS FOR WIRE ABOVE NO. 8 AWG.
29. CONNECTORS FOR POWER CONDUCTORS: CONTRACTOR SHALL USE PRESSURE TYPE INSULATED TWIST-ON CONNECTORS FOR NO. 10 AWG AND SMALLER. USE SOLDERLESS MECHANICAL TERMINAL LUGS FOR NO. 8 AWG AND LARGER.
30. SERVICE: 120/240V, SINGLE PHASE, 3 WIRE CONNECTION AVAILABLE FROM UTILITY COMPANY. OWNER OR OWNERS AGENT WILL APPLY FOR POWER.
31. TELEPHONE SERVICE: CONTRACTOR SHALL PROVIDE EMPTY CONDUITS WITH PULL STRINGS AS INDICATED ON DRAWINGS.
32. ELECTRICAL AND TELCO RACEWAYS TO BE BURIED A MINIMUM OF 2' DEPTH.
33. CONTRACTOR SHALL PLACE TWO LENGTHS OF WARNING TAPE AT A DEPTH OF 12" BELOW GROUND AND DIRECTLY ABOVE ELECTRICAL AND TELCO SERVICE CONDUITS. CAUTIONS TAPE TO READ "CAUTION BURIED ELECTRIC" OR "BURIED TELECOMM".
34. ALL BOLTS SHALL BE 3-16 STAINLESS STEEL

GROUNDING NOTES

1. GC SHALL USE PERMANENT MARKER TO DRAW THE LINES BETWEEN EACH SECTION AND LABEL EACH SECTION ("P", "A", "N", "I") WITH 1" HIGH LETTERS.
2. ALL HARDWARE 3-16 STAINLESS STEEL, INCLUDING LOCK WASHERS, COAT ALL SURFACES WITH AN ANTI-OXIDANT COMPOUND BEFORE MATING. ALL HARDWARE SHALL BE STAINLESS STEEL 3/8 INCH DIAMETER OR LARGER.
3. FOR GROUND BOND TO STEEL ONLY: INSERT A CADMIUM FLAT WASHER BETWEEN LUG AND STEEL, COAT ALL SURFACES WITH AN ANTI-OXIDANT COMPOUND BEFORE MATING.
4. WHEN THE SCOPE OF WORK REQUIRES THE ADDITION OF A GROUNDING BAR TO AN EXISTING UTILITY POLE,THE SUBCONTRACTOR SHALL OBTAIN APPROVAL FROM THE UTILITY POLE OWNER PRIOR TO MOUNTING THE GROUNDING BAR TO THE UTILITY POLE.
5. ALL ELECTRICAL AND GROUNDING AT THE POLE SITE SHALL COMPLY WITH THE NATIONAL ELECTRICAL CODE (NEC), NATIONAL FIRE PROTECTION ASSOCIATION (NFPA) 780 (LATEST EDITION), AND MANUFACTURER.

ADDITIONAL NOTES:

6. ALL DETAILS ARE SHOWN IN GENERAL TERMS. ACTUAL GROUNDING INSTALLATION AND CONSTRUCTION MAY VARY DUE TO SITE SPECIFIC CONDITIONS.
7. GROUND ALL ANTENNA BASES, FRAMES, CABLE RUNS, AND OTHER METALLIC COMPONENTS USING #6 GROUND WIRES. FOLLOW ANTENNA AND BTS MANUFACTURER'S PRACTICES FOR GROUNDING REQUIREMENTS.
8. ALL GROUND CONNECTIONS SHALL BE #6 AWG U.N.O. ALL WIRES SHALL BE COPPER WITH THHN/THWN. ALL GROUND WIRE SHALL BE SOLID TIN COATED OR STRANDED GREEN INSULATED WIRE.
9. CONTRACTOR TO VERIFY AND TEST GROUND TO SOURCE, 10 OHMS MAXIMUM. PROVIDE SUPPLEMENT GROUNDING RODS AS REQUIRED TO ACHIEVE SPECIFIED OHMS READING. GROUNDING AND OTHER OPTIONAL TESTING WILL BE WITNESSED BY THE APPLICANT REPRESENTATIVE.
10. NOTIFY ARCHITECT/ENGINEER IF THERE ARE ANY DIFFICULTIES INSTALLING GROUNDING SYSTEM DUE TO SITE SOIL CONDITIONS.
11. ALL HORIZONTALLY RUN GROUNDING CONDUCTORS SHALL BE INSTALLED MINIMUM 12" BELOW GRADE/FROST-LINE IN TRENCH, U.N.O., AND BACK FILL SHALL BE COMPACTED AS REQUIRED BY ARCHITECT.
12. ALL GROUND CONDUCTORS SHALL BE RUN AS STRAIGHT AND SHORT AS POSSIBLE, WITH A MINIMUM 12" BENDING RADIUS NOT LESS THAN 90 DEGREES.
13. ACCEPTABLE CONNECTIONS FOR GROUNDING SYSTEM SHALL BE:
    a. BURNDY, HY-GRADE U.L. LISTED CONNECTORS FOR OUTDOOR USE OR AS APPROVED BY APPLICANT PROJECT MANAGER.
    b. CADWELD, EXOTHERMIC WELDS (WELDED CONNECTIONS).
    c. ONE (1) HOLE TINNED COPPER COMPRESSION (LONG BARREL) FITTINGS.
14. ALL CRIMPED CONNECTIONS SHALL HAVE EMBOSSED MANUFACTURER'S DIEMARK VISIBLE AT THE CRIMP AND WEATHER-PROOFED WITH HEAT SHRINK (RESULTING FROM USE OF PROPER CRIMPING DEVICES).
15. ALL CONNECTION HARDWARE SHALL BE TYPE 3-16 STAINLESS STEEL (NOT ATTRACTED TO MAGNETS).
16. ELECTRICAL SERVICE EQUIPMENT GROUNDING SHALL COMPLY WITH NEC, ARTICLE 250-82 AND SHALL BOND ALL EXISTING AND NEW GROUNDING ELECTRODES. NEW GROUNDING ELECTRODE SHALL INCLUDE BUT NOT LIMITED TO GROUND RODS, GROUND RING IF SERVICE IS WITHIN THE RADIO EQUIPMENT LOCATION, BUILDING STEEL IF APPLICABLE, COLD WATER CONNECTIONS MUST BE MADE ON THE STREET SIDE OF MAIN SHUT-OFF VALVE.

TESTING AND EQUIPMENT TURN UP REQUIREMENTS

1. RF CABLE, DATA CABLE, RADIO EQUIPMENT AND BACK HAUL EQUIPMENT TESTING WILL COMPLY WITH CURRENT INDUSTRY STANDARDS AND OR THOSE STANDARDS OF THE EQUIPMENT MANUFACTURE OR PROVIDED TO THE CONTRACTOR PRIOR TO TESTING.
2. CONTRACTOR WILL USE THE APPROPRIATE CALIBRATED TESTING EQUIPMENT IN THE TESTING OF RF CABLE, DATA CABLE, RADIO EQUIPMENT AND BACK HAUL EQUIPMENT THAT MEET INDUSTRY STANDARDS OF THE MANUFACTURE OR THOSE STANDARDS PROVIDED TO THE CONTRACTOR PRIOR TO TESTING.
3. CONTRACTOR TO VERIFY AND RECORD ALL TEST RESULTS AND PROVIDE THESE RESULTS WITHIN THE FINAL CLOSE OUT PACKAGE.
4. ALL PERSONNEL INVOLVED IN THE TESTING OF RF CABLE, DATA CABLE, RADIO EQUIPMENT AND BACK HAUL EQUIPMENT WILL BE REQUIRED TO HAVE BEEN TRAINED AND OR CERTIFIED IN THE PROPER TESTING OF RF CABLE, DATA CABLE, RADIO EQUIPMENT AND BACK HAUL EQUIPMENT.
5. ALL TEST RESULTS SHALL BE TIME STAMPED, RECORDED AND PRESENTED PRIOR TO ENERGIZING AND TURN UP OF ANY EQUIPMENT.
6. GPS EQUIPMENT IS NOT TO BE TESTED OR ATTACHED TO ANY CABLING DURING TESTING, DOING SO WILL DAMAGE THE GPS UNIT.
7. PRIOR TO TESTING IF THE CONTRACTOR HAS ANY QUESTIONS ABOUT THE TESTING PROCEDURES THEY ARE TO CALL AND OBTAIN ASSISTANCE FROM A QUALIFIED DESIGNATED TESTING REPRESENTATIVE.
8. EQUIPMENT IS NOT TO BE ENERGIZED UNTIL ALL TESTING HAS BEEN COMPLETED, APPROVED AND THE APPROPRIATE AUTHORITY HAS BEEN NOTIFIED AND GIVES APPROVAL TO ENERGIZE THE EQUIPMENT.

MISCELLANEOUS MATERIALS

FROM TIME TO TIME IT MAY BE NECESSARY TO MAKE MINOR ADJUSTMENTS TO ACCOMMODATE, LEVEL OR SPACE ANTENNA MOUNTS AND EQUIPMENT. EXAMPLE ADDING A WASHER OR SHIM TO LEVEL OUT A BRACKET OR MOUNT TO MEET SPECIFICATIONS. HAVING TO OFFSET OR SPACE A BRACKET OR MOUNT DUE TO FLANGES AND OR OTHER SMALL PROTRUSIONS ON A POLE TOP ASSEMBLY. ANY MATERIALS, NUTS, BOLTS, SHIMS OR SPACERS USED TO ACCOMMODATE ADJUSTMENTS TO ANTENNA MOUNTS AND EQUIPMENT MUST BE PERMANENTLY AFFIXED, BOLTED TO THE MOUNT, BRACKET OR POLE; AS NEVER TO BECOME A FALL HAZARD. ALL MATERIALS NUTS, BOLTS, SHIMS OR SPACERS USED IN MINOR ADJUSTMENTS, MUST BE EITHER STAINLESS STEEL OR GALVANIZED; HALF WASHERS ARE PROHIBITED. ANY MINOR ADJUSTMENTS TO ACCOMMODATE ANTENNA MOUNTS AND EQUIPMENT SHOULD BE DONE IN A PROFESSIONAL MANOR WITH SAFETY AND AESTHETICS IN MIND. SHOULD YOU HAVE ANY QUESTIONS CONTACT YOUR ASSIGNED CONSTRUCTION PROJECT MANAGER OR ENGINEER FOR GUIDANCE.

mobilitie
intelligent infrastructure

MOBILITIE, LLC

DRAWN BY:	V.C.
DATE:	07/14/2016

REV	DATE	DESCRIPTION	BY
0	07/14/2016	90% CONSTRUCTION	V.C.

PRELIMINARY NOT FOR CONSTRUCTION

IT IS A VIOLATION OF LAW FOR ANY PERSON, UNLESS THEY ARE ACTING UNDER THE DIRECTION OF A LICENSED PROFESSIONAL ENGINEER, TO ALTER THIS DOCUMENT.

SITE ID:
9WAB001600A
8200 MARTIN WAY E. LACEY, WA 98516 ,
MARTIN WAY E. & MARVIN RD. NE.

NEW UTILITY WOOD POLE

SHEET TITLE

GENERAL NOTES

SHEET NUMBER

T-2

SITE WORK NOTES

1. DO NOT EXCAVATE OR DISTURB BEYOND THE PROPERTY LINES OR LEASE LINES, UNLESS OTHERWISE NOTED.
2. DO NOT SCALE BUILDING DIMENSIONS FROM DRAWING.
3. SIZE, LOCATION AND TYPE OF ANY UNDERGROUND UTILITIES OR IMPROVEMENTS SHALL BE ACCURATELY NOTED AND PLACED ON AS-BUILT DRAWINGS BY GENERAL CONTRACTOR AND ISSUED TO ARCHITECT/ENGINEER AT COMPLETION OF PROJECT.
4. ALL EXISTING UTILITIES, FACILITIES, CONDITIONS AND THEIR DIMENSIONS SHOWN ON PLANS HAVE. BEEN PLOTTED FROM VAILABLE RECORDS. THE ENGINEER AND OWNER ASSUME NO RESPONSIBILITY WHATSOEVER AS TO THE SUFFICIENCY OR ACCURACY OF THE INFORMATION SHOWN ON THE PLANS OR THE MANNER OF THEIR REMOVAL OR ADJUSTMENT. CONTRACTOR SHALL BE RESPONSIBLE FOR DETERMINING EXACT LOCATION OF ALL EXISTING UTILITIES AND FACILITIES PRIOR TO START OF CONSTRUCTION. CONTRACTOR SHALL ALSO OBTAIN FROM EACH UTILITY COMPANY DETAILED INFORMATION RELATIVE TO WORKING SCHEDULES AND METHODS OF REMOVING OR ADJUSTING EXISTING UTILITIES.
5. CONTRACTOR SHALL VERIFY ALL EXISTING UTILITIES BOTH HORIZONTALLY AND VERTICALLY PRIOR TO START OF CONSTRUCTION. ANY DISCREPANCIES OR DOUBTS AS TO THE INTERPRETATION OF PLANS SHALL BE IMMEDIATELY REPORTED TO THE ARCHITECT/ENGINEER FOR RESOLUTION AND INSTRUCTION, AND NO FURTHER WORK SHALL BE PERFORMED UNTIL THE DISCREPANCY IS CHECKED AND CORRECTED BY THE ARCHITECT/ENGINEER. FAILURE TO SECURE SUCH INSTRUCTION MEANS CONTRACTOR WILL HAVE WORKED AT HIS/HER OWN RISK AND EXPENSE. CONTRACTOR SHALL CALL LOCAL DIGGER HOT LINE FOR UTILITY LOCATIONS 48 HOURS PRIOR TO START OF CONSTRUCTION.
6. ALL NEW AND EXISTING UTILITY STRUCTURES ON SITE AND IN AREAS TO BE DISTURBED BY CONSTRUCTION SHALL BE ADJUSTED TO FINISH ELEVATIONS PRIOR TO FINAL INSPECTION OF WORK.
7. GRADING OF THE SITE WORK AREA IS TO BE SMOOTH AND CONTINUOUS IN SLOPE AND IS TO FEATHER INTO EXISTING GRADES AT THE GRADING LIMITS.
8. ALL TEMPORARY EXCAVATIONS FOR THE INSTALLATION OF FOUNDATIONS, UTILITIES, ETC., SHALL BE PROPERLY LAID BACK OR BRACED IN ACCORDANCE WITH CORRECT OCCUPATIONAL SAFETY AND HEALTH ADMINISTRATION (OSHA) REQUIREMENTS.
9. STRUCTURAL FILLS SUPPORTING PAVEMENTS SHALL BE COMPACTED TO 95% OF MAXIMUM STANDARD PROCTOR DRY DENSITY.
10. NEW GRADES NOT IN BUILDING AND DRIVEWAY IMPROVEMENT AREA TO BE ACHIEVED BY FILLING WITH APPROVED CLEAN FILL AND COMPACTED TO 95% OF STANDARD PROCTOR DENSITY.
11. ALL FILL SHALL BE PLACED IN UNIFORM LIFTS. THE LIFTS THICKNESS SHOULD NOT EXCEED THAT WHICH CAN BE PROPERLY COMPACTED THROUGHOUT ITS ENTIRE DEPTH WITH THE EQUIPMENT AVAILABLE.
12. ANY FILLS PLACED ON EXISTING SLOPES THAT ARE STEEPER THAN 10 HORIZONTAL TO 1 VERTICAL SHALL BE PROPERLY BENCHED INTO THE EXISTING SLOPE AS DIRECTED BY A GEOTECHNICAL ENGINEER.
13. CONTRACTOR SHALL CLEAN ENTIRE SITE AFTER CONSTRUCTION SUCH THAT NO PAPERS, TRASH, WEEDS, BRUSH OR ANY OTHER DEPOSITS WILL REMAIN. ALL MATERIALS COLLECTED DURING CLEANING OPERATIONS SHALL BE DISPOSED OF OFF-SITE BY THE GENERAL CONTRACTOR.
14. ALL TREES AND SHRUBS WHICH ARE NOT IN DIRECT CONFLICT WITH THE IMPROVEMENTS SHALL BE PROTECTED BY THE GENERAL CONTRACTOR.
15. ALL SITE WORK SHALL BE CAREFULLY COORDINATED BY GENERAL CONTRACTOR WITH LOCAL UTILITY COMPANY, TELEPHONE COMPANY, AND ANY OTHER UTILITY COMPANIES HAVING JURISDICTION OVER THIS LOCATION.

ENVIRONMENTAL NOTES

1. ALL WORK PERFORMED SHALL BE DONE IN ACCORDANCE WITH ISSUED PERMITS. THE CONTRACTOR SHALL BE RESPONSIBLE FOR PAYMENT OF FINES AND PROPER CLEAN UP FOR AREAS IN VIOLATION.
2. CONTRACTOR AND/OR DEVELOPER SHALL BE RESPONSIBLE FOR CONSTRUCTION AND MAINTENANCE OF EROSION AND SEDIMENTATION CONTROLS DURING CONSTRUCTION FOR PROTECTION OF ADJACENT PROPERTIES, ROADWAYS AND WATERWAYS AND SHALL BE MAINTAINED IN PLACE THROUGH FINAL JURISDICTIONAL INSPECTION & RELEASE OF SITE.
3. CONTRACTOR SHALL INSTALL/CONSTRUCT ALL NECESSARY SEDIMENT/SILT CONTROL FENCING AND PROTECTIVE MEASURES WITHIN THE LIMITS OF SITE DISTURBANCE PRIOR TO CONSTRUCTION.
4. NO SEDIMENT SHALL BE ALLOWED TO EXIT THE PROPERTY. THE CONTRACTOR IS RESPONSIBLE FOR TAKING ADEQUATE MEASURES FOR CONTROLLING EROSION. ADDITIONAL SEDIMENT CONTROL FENCING MAY BE REQUIRED IN ANY AREAS SUBJECT TO EROSION.
5. THE CONTRACTOR IS RESPONSIBLE FOR MAINTAINING POSITIVE DRAINAGE ON THE SITE AT ALL TIMES WITH SILT AND EROSION CONTROL MEASURES MAINTAINED ON THE DOWNSTREAM SIDE OF SITE DRAINAGE. ANY DAMAGE TO ADJACENT PROPERTY AS A RESULT OF EROSION WILL BE CORRECTED AT THE CONTRACTORS EXPENSE.
6. CONTRACTOR SHALL BE RESPONSIBLE FOR DAILY INSPECTIONS AND ANY REPAIRS OF ALL SEDIMENT CONTROL MEASURES INCLUDING SEDIMENT REMOVAL AS NECESSARY.
7. CLEARING OF VEGETATION AND TREE REMOVAL SHALL BE ONLY AS PERMITTED AND BE HELD TO A MINIMUM. ONLY TREES NECESSARY FOR CONSTRUCTION OF THE FACILITIES SHALL BE REMOVED.
8. SEEDING AND MULCHING AND/OR SODDING OF THE SITE WILL BE ACCOMPLISHED AS SOON AS POSSIBLE AFTER COMPLETION OF THE PROJECT FACILITIES AFFECTING LAND DISTURBANCE.
9. CONTRACTOR SHALL PROVIDE ALL EROSION AND SEDIMENTATION CONTROL MEASURES AS REQUIRED BY LOCAL, COUNTY AND STATE CODES AND ORDINANCES TO PROTECT EMBANKMENTS FROM SOIL LOSS AND TO PREVENT ACCUMULATION OF SOIL AND SILT IN STREAMS AND DRAINAGE PATHS LEAVING THE CONSTRUCTION AREA. THIS MAY INCLUDE SUCH MEASURES AS SILT FENCES, STRAW BALE SEDIMENT BARRIERS, AND CHECK DAMS.
10. RIP RAP OF SIZES INDICATED SHALL CONSIST OF CLEAN, HARD, SOUND, DURABLE, UNIFORM IN QUALITY STONE FREE OF ANY DETRIMENTAL QUANTITY OF SOFT, FRIABLE, THIN, ELONGATED OR LAMINATED PIECES, DISINTEGRATED MATERIAL, ORGANIC MATTER, OIL, ALKALI, OR OTHER DELETERIOUS SUBSTANCES

FOUNDATION, EXCAVATION AND BACKFILL NOTES

1. ALL FINAL GRADED SLOPES SHALL BE A MAXIMUM OF 3 HORIZONTAL TO 1 VERTICAL.
2. ALL EXCAVATIONS PREPARED FOR PLACEMENT OF CONCRETE SHALL BE OF UNDISTURBED SOILS, SUBSTANTIALLY HORIZONTAL AND FREE FROM ANY LOOSE, UNSUITABLE MATERIAL OR FROZEN SOILS, AND WITHOUT THE PRESENCE OF POUNDING WATER. DEWATERING FOR EXCESS GROUND WATER SHALL BE PROVIDED WHEN REQUIRED. COMPACTION OF SOILS UNDER CONCRETE PAD FOUNDATIONS SHALL NOT BE LESS THAN 95% OF THE MODIFIED PROCTOR MAXIMUM DRY DENSITY FOR THE SOIL IN ACCORDANCE WITH ASTM D1557.
3. CONCRETE FOUNDATIONS SHALL NOT BE PLACED ON ORGANIC OR UNSUITABLE MATERIAL. IF INADEQUATE BEARING CAPACITY IS REACHED AT THE DESIGNED EXCAVATION DEPTH, THE UNSATISFACTORY SOIL SHALL BE EXCAVATED TO ITS FULL DEPTH AND EITHER BE REPLACED WITH MECHANICALLY COMPACTED GRANULAR MATERIAL OR THE EXCAVATION SHALL BE FILLED WITH CONCRETE OF THE SAME TYPE SPECIFIED FOR THE FOUNDATION. CRUSHED STONE MAY BE USED TO STABILIZE THE BOTTOM OF THE EXCAVATION. ANY STONE SUB BASE MATERIAL, IF USED, SHALL NOT SUBSTITUTE FOR REQUIRED THICKNESS OF CONCRETE.
4. ALL EXCAVATIONS SHALL BE CLEAN OF UNSUITABLE MATERIAL SUCH AS VEGETATION, TRASH, DEBRIS, AND SO FORTH PRIOR TO BACK FILLING. BACK FILL SHALL CONSIST OF APPROVED MATERIALS SUCH AS EARTH, LOAM, SANDY CLAY, SAND AND GRAVEL, OR SOFT SHALE, FREE FROM CLODS OR LARGE STONES OVER 2 1/2" MAX DIMENSIONS. ALL BACK FILL SHALL BE PLACED IN COMPACTED LAYERS.
5. ALL FILL MATERIALS AND FOUNDATION BACK FILL SHALL BE PLACED IN MAXIMUM 6"THICK LIFTS BEFORE COMPACTION. EACH LIFT SHALL BE WETTED IF REQUIRED AND COMPACTED TO NOT LESS THAN 95% OF THE MODIFIED PROCTOR MAXIMUM DRY DENSITY FOR SOIL IN ACCORDANCE WITH ASTM D1557.
6. NEWLY PLACED CONCRETE FOUNDATIONS SHALL CURE A MINIMUM OF 72 HRS PRIOR TO BACK FILLING.
7. FINISHED GRADING SHALL BE SLOPED TO PROVIDE POSITIVE DRAINAGE AND PREVENT STANDING WATER. THE FINAL (FINISH) ELEVATION OF SLAB FOUNDATIONS SHALL SLOPE AWAY IN ALL DIRECTIONS FROM THE CENTER. FINISH GRADE OF CONCRETE PADS SHALL BE A MAXIMUM OF 4 INCHES ABOVE FINAL FINISH GRADE ELEVATIONS. PROVIDE SURFACE FILL GRAVEL TO ESTABLISH SPECIFIED ELEVATIONS WHERE REQUIRED.
8. NEWLY GRADED SURFACE AREAS TO RECEIVE GRAVEL SHALL BE COVERED WITH GEOTEXTILE FABRIC TYPE: TYPAR-3401 AS MANUFACTURED BY "CONSTRUCTION MATERIAL 1-800-239-3841" OR AN APPROVED EQUIVALENT, SHOWN ON PLANS. THE GEOTEXTILE FABRIC SHALL BE BLACK IN COLOR TO CONTROL THE RECURRENCE OF VEGETATIVE GROWTH AND EXTEND TO WITHIN 1 FOOT OUTSIDE THE SITE FENCING OR ELECTRICAL GROUNDING SYSTEM PERIMETER WHICH EVER IS GREATER. ALL FABRIC SHALL BE COVERED WITH A MINIMUM OF 4" DEEP COMPACTED STONE OR GRAVEL AS SPECIFIED. I.E. FDOT TYPE No. 57 FOR FENCED COMPOUND; FDOT TYPE No. 67 FOR ACCESS DRIVE AREA.
9. IN ALL AREAS TO RECEIVE FILL, REMOVE ALL VEGETATION, TOPSOIL, DEBRIS, WET AND UNSATISFACTORY SOIL MATERIALS, OBSTRUCTIONS, AND DELETERIOUS MATERIALS FROM GROUND SURFACE. PLOW STRIP OR BREAK UP SLOPED SURFACES STEEPER THAN 1 VERTICAL TO 4 HORIZONTAL SUCH THAT FILL MATERIAL WILL BIND WITH EXISTING/PREPARED SOIL SURFACE.
10. WHEN SUB GRADE OR PREPARED GROUND SURFACE HAS A DENSITY LESS THAN THAT REQUIRED FOR THE FILL MATERIAL, SCARIFY THE GROUND SURFACE TO DEPTH REQUIRED, PULVERIZE, MOISTURE-CONDITION AND/OR AERATE THE SOILS AND RECOMPACT TO THE REQUIRED DENSITY PRIOR TO PLACEMENT OF FILLS.
11. IN AREAS WHICH EXISTING GRAVEL SURFACING IS REMOVED OR DISTURBED DURING CONSTRUCTION OPERATIONS, REPLACE GRAVEL SURFACING TO MATCH ADJACENT GRAVEL SURFACING AND RESTORED TO THE SAME THICKNESS AND COMPACTION AS SPECIFIED. ALL RESTORED GRAVEL SURFACING SHALL BE FREE FROM CORRUGATIONS AND WAVES.
12. EXISTING GRAVEL SURFACING MAY BE EXCAVATED SEPARATELY AND REUSED WITH THE CONDITION THAT ANY UNFAVORABLE AMOUNTS OF ORGANIC MATTER, OR OTHER DELETERIOUS MATERIALS ARE REMOVED PRIOR TO REUSE. FURNISH ANY ADDITIONAL GRAVEL RESURFACING MATERIAL AS NEEDED TO PROVIDE A FULL DEPTH COMPACTED SURFACE THROUGHOUT SITE.
13. GRAVEL SUB SURFACE SHALL BE PREPARED TO REQUIRED COMPACTION AND SUB GRADE ELEVATIONS BEFORE GRAVEL SURFACING IS PLACED AND/OR RESTORED. ANY LOOSE OR DISTURBED MATERIALS SHALL BE THOROUGHLY COMPACTED AND ANY DEPRESSIONS IN THE SUB GRADE SHALL BE FILLED AND COMPACTED WITH APPROVED SELECTED MATERIAL. GRAVEL SURFACING MATERIAL SHALL NOT BE USED FOR FILLING DEPRESSIONS IN THE SUB GRADE.
14. PROTECT EXISTING GRAVEL SURFACING AND SUB GRADE IN AREAS WHERE EQUIPMENT LOADS WILL OPERATE. USE PLANKING 'MATTS' OR OTHER SUITABLE PROTECTION DESIGNED TO SPREAD EQUIPMENT LOADS AS MAY BE NECESSARY. REPAIR ANY DAMAGE TO EXISTING GRAVEL SURFACING OR SUB GRADE WHERE SUCH DAMAGE IS DUE TO THE CONTRACTORS OPERATIONS.
15. DAMAGE TO EXISTING STRUCTURES AND/OR UTILITIES RESULTING FROM CONTRACTORS NEGLIGENCE SHALL BE REPAIRED AND/ OR REPLACED TO THE OWNERS SATISFACTION AT NO ADDITIONAL COST TO THE CONTRACT.
16. ALL SUITABLE BORROW MATERIAL FOR BACK FILL OF THE SITE SHALL BE INCLUDED IN THE BID. EXCESS TOPSOIL AND UNSUITABLE MATERIAL SHALL BE DISPOSED OF OFF SITE AT LOCATIONS APPROVED BY GOVERNING AGENCIES AT NO ADDITIONAL COST TO THE CONTRACT.

mobilitie
intelligent infrastructure

MOBILITIE, LLC

DRAWN BY:	V.C.
DATE:	07/14/2016

REV	DATE	DESCRIPTION	BY
0	07/14/2016	90% CONSTRUCTION	V.C.

PRELIMINARY NOT FOR CONSTRUCTION

IT IS A VIOLATION OF LAW FOR ANY PERSON, UNLESS THEY ARE ACTING UNDER THE DIRECTION OF A LICENSED PROFESSIONAL ENGINEER, TO ALTER THIS DOCUMENT.

SITE ID:
9WAB001600A
8200 MARTIN WAY E. LACEY, WA 98516 ,
MARTIN WAY E. & MARVIN RD. NE.

NEW UTILITY WOOD POLE

SHEET TITLE

GENERAL NOTES

SHEET NUMBER

T-3

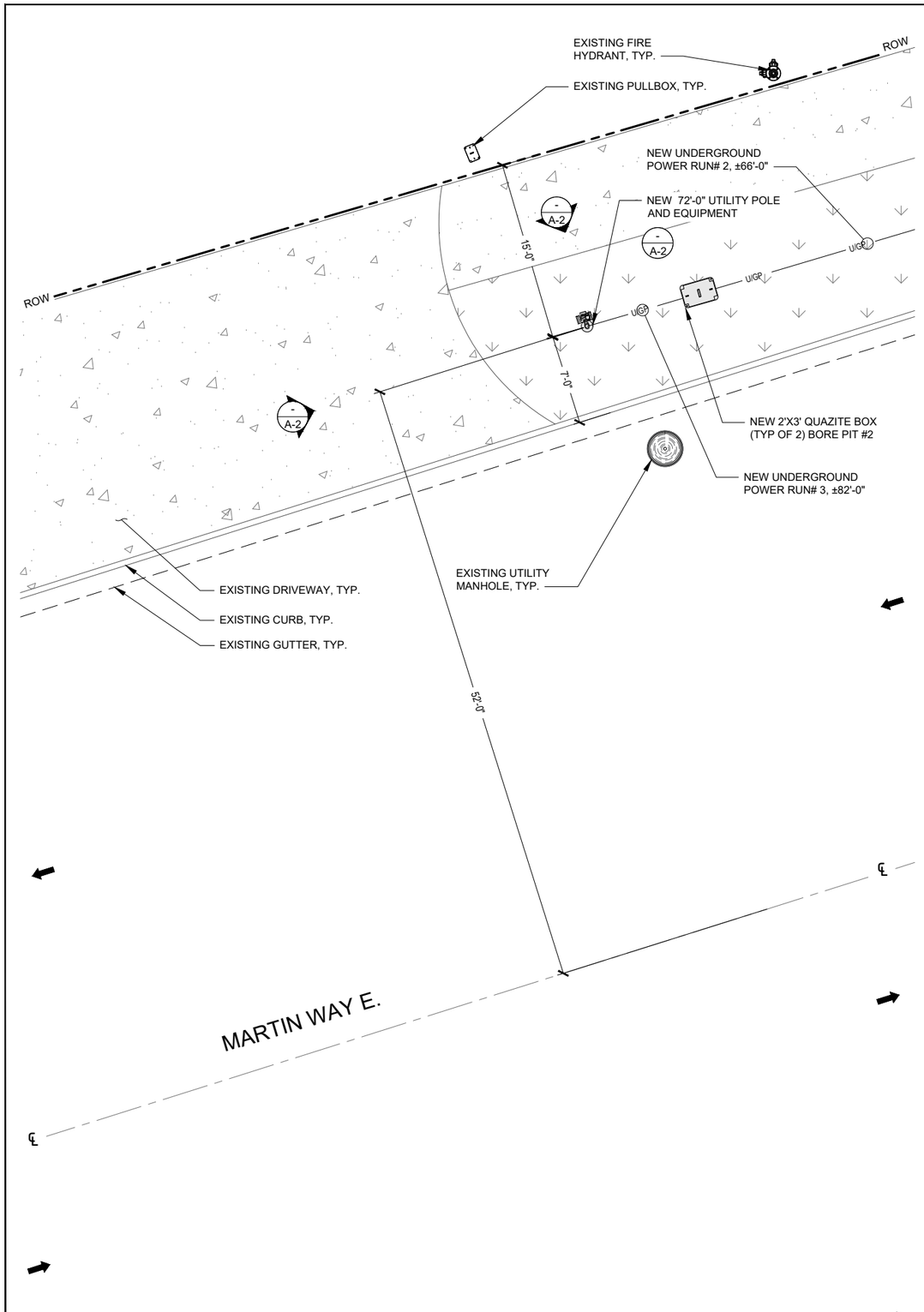

ENLARGED SITE PLAN

24"x36" SCALE: 3/16" = 1'-0"
11"x17" SCALE: 3/32" = 1'-0"
4' 2' 0' 4'

2

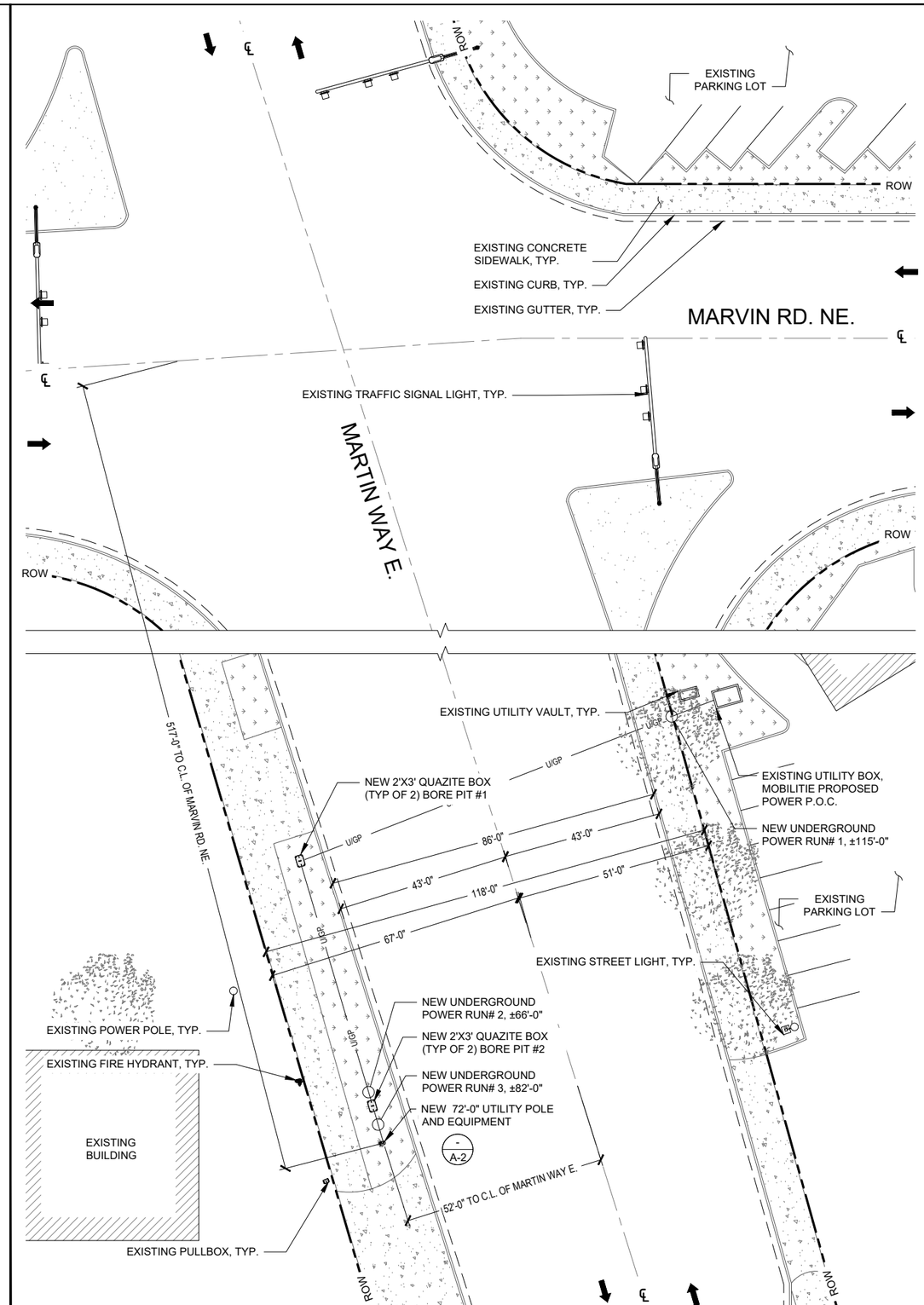

SITE PLAN

24"x36" SCALE: 1/16" = 1'-0"
11"x17" SCALE: 1/32" = 1'-0"
16' 12' 8' 4' 0' 16'

1

mobilitie
intelligent infrastructure

MOBILITIE, LLC

DRAWN BY:	V.C.
DATE:	07/14/2016

REV	DATE	DESCRIPTION	BY
0	07/14/2016	90% CONSTRUCTION	V.C.

PRELIMINARY NOT FOR CONSTRUCTION

IT IS A VIOLATION OF LAW FOR ANY PERSON, UNLESS THEY ARE ACTING UNDER THE DIRECTION OF A LICENSED PROFESSIONAL ENGINEER, TO ALTER THIS DOCUMENT.

SITE ID:
9WAB001600A
8200 MARTIN WAY E. LACEY, WA 98516 , MARTIN WAY E. & MARVIN RD. NE.

NEW UTILITY WOOD POLE

SHEET TITLE

SITE PLANS

SHEET NUMBER

A-1

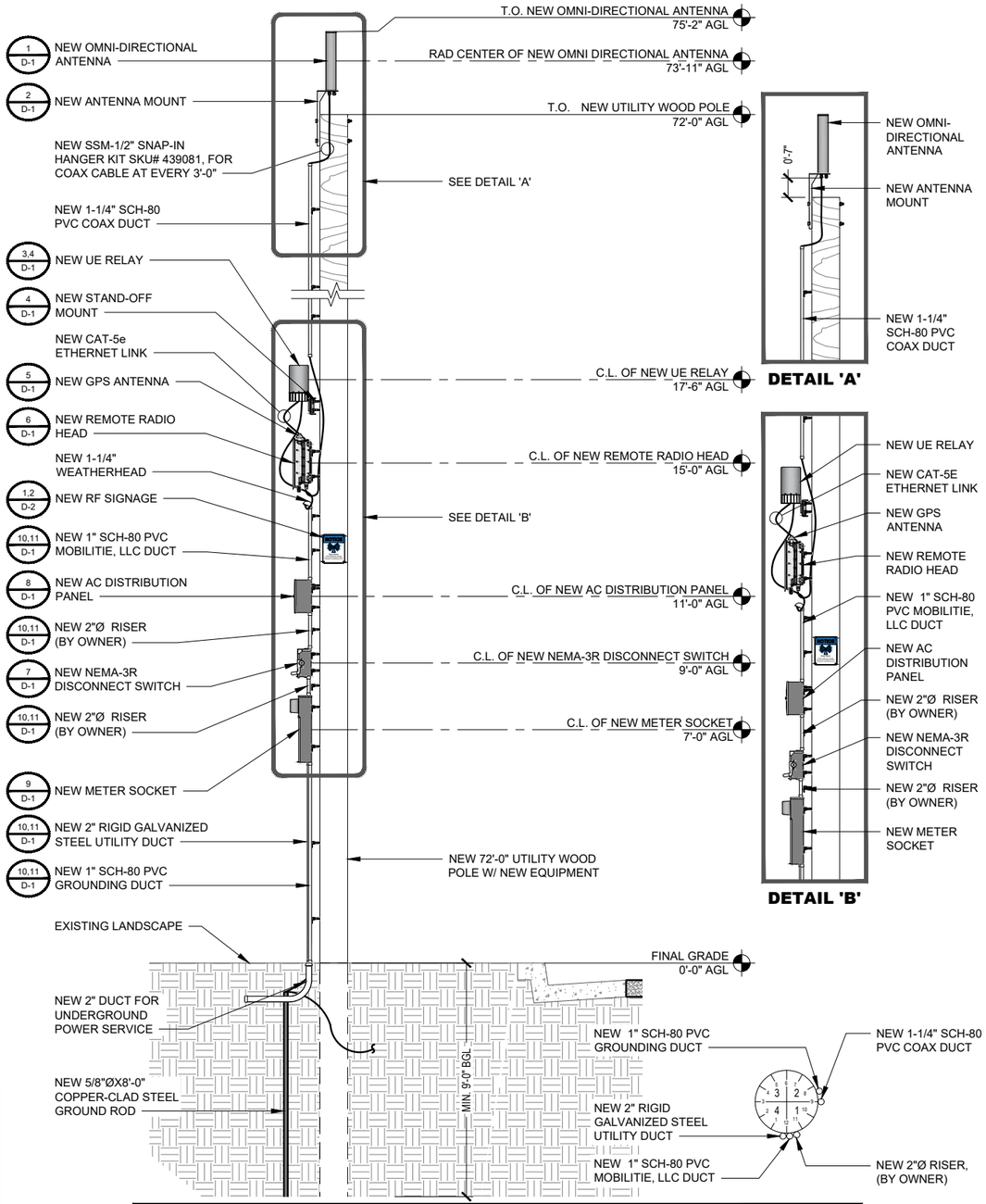

EQUIPMENT CHART				
QUANTITY	DESCRIPTION	CABLE LENGTH	DIMENSIONS (HxWxD)	WEIGHT
1	ALPHA WIRELESS AW3477-S OMNI-DIRECTIONAL ANTENNA	TBD	29.5" X 4.5"Ø	8.8 LBS
1	AIRSPAN IR460 UE RELAY	TBD	7"Ø X 13"	8.8 LBS
1	PCTEL 3971D-DH-W GPS ANTENNA	TBD	2.36"Ø X 2.48"	<.11 LBS
1	AIRSPAN AH 1000D REMOTE RADIO HEAD	TBD	18.9" X 9.6" X 7.48"	34.14 LBS
1	EATON COOPER B-LINE U114B METER SOCKET	TBD	24" X 12" X 4.63"	TBD
1	RAYCAP RSTAC-3111-P120 AC DISTRIBUTION PANEL	TBD	13" X 11.4" X 4.4"	~5 LBS
1	SIEMENS GNF321R NEMA TYPE-3R DISCONNECT SWITCH	TBD	8.25" X 7.68" X 3.125"	24 LBS

NEW SOUTHWEST ELEVATION

24"x36" SCALE: 1/2" = 1'-0"
11"x17" SCALE: 1/4" = 1'-0"
2' 1' 0" 2'

2

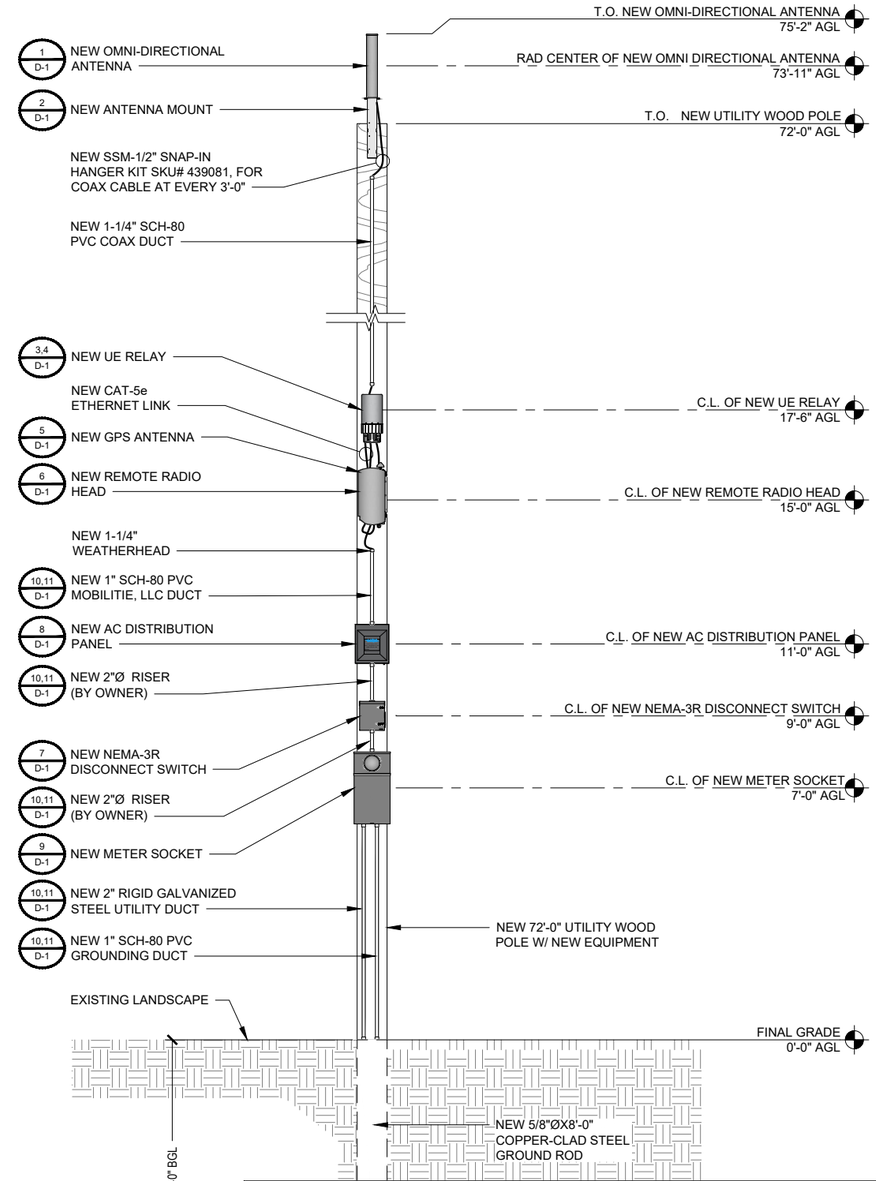

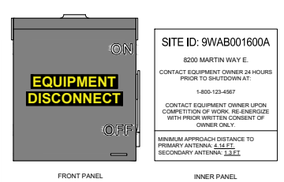

DISCONNECT SWITCH PANEL DETAILS

MAKE READY NOTES:

1. NEW EQUIPMENT TO BE PAINTED TO MATCH SURROUNDING AREA
2. FROM TIME TO TIME IT MAY BE NECESSARY TO MAKE MINOR ADJUSTMENTS TO ACCOMMODATE, LEVEL OR SPACE ANTENNA MOUNTS AND EQUIPMENT. EXAMPLE ADDING A WASHER OR SHIM TO LEVEL OUT A BRACKET OR MOUNT TO MEET SPECIFICATIONS. HAVING TO OFFSET OR SPACE A BRACKET OR MOUNT DUE TO FLANGES AND OR OTHER SMALL PROTRUSIONS ON A POLE TOP ASSEMBLY. ANY MATERIALS, NUTS, BOLTS, SHIMS OR SPACERS USED TO ACCOMMODATE ADJUSTMENTS TO ANTENNA MOUNTS AND EQUIPMENT MUST BE PERMANENTLY AFFIXED, BOLTED TO THE MOUNT, BRACKET OR POLE; AS NEVER TO BECOME A FALL HAZARD. ALL MATERIALS NUTS, BOLTS, SHIMS OR SPACERS USED IN MINOR ADJUSTMENTS, MUST BE EITHER STAINLESS STEEL OR GALVANIZED; HALF WASHERS ARE PROHIBITED. ANY MINOR ADJUSTMENTS TO ACCOMMODATE ANTENNA MOUNTS AND EQUIPMENT SHOULD BE DONE IN A PROFESSIONAL MANOR WITH SAFETY AND AESTHETICS IN MIND. SHOULD YOU HAVE ANY QUESTIONS CONTACT YOUR ASSIGNED CONSTRUCTION PROJECT MANAGER OR ENGINEER FOR GUIDANCE.
3. NEW SSM-1/2" SNAP-IN HANGER KIT SKU# 439081, PART# WSH-U12, (18" FROM SOURCE THEN 3'-0" MAX. SPACING AFTER) FOR ALL LOOSE WIRES
4. FOR ALL ELECTRICAL INFORMATION PLEASE REFERENCE E-1 SHEET

NEW NORTHWEST ELEVATION

24"x36" SCALE: 1/2" = 1'-0"
11"x17" SCALE: 1/4" = 1'-0"
2' 1' 0" 2'

1

mobilitie
intelligent infrastructure

MOBILITIE, LLC

DRAWN BY:	V.C.
DATE:	07/14/2016

REV	DATE	DESCRIPTION	BY
0	07/14/2016	90% CONSTRUCTION	V.C.

PRELIMINARY NOT FOR CONSTRUCTION

IT IS A VIOLATION OF LAW FOR ANY PERSON, UNLESS THEY ARE ACTING UNDER THE DIRECTION OF A LICENSED PROFESSIONAL ENGINEER, TO ALTER THIS DOCUMENT.

SITE ID: 9WAB001600A

8200 MARTIN WAY E. LACEY, WA 98516 , MARTIN WAY E. & MARVIN RD. NE.

NEW UTILITY WOOD POLE

SHEET TITLE
SOUTHWEST & NORTHWEST ELEVATIONS

SHEET NUMBER
A-2

MANUFACTURER:
HUBBELL POWER SYSTEMS
MODEL: C6CS024
(OR APPROVED EQUAL)
HEIGHT: 5.5 IN
DEPTH: 6.5 IN
WIDTH: 5.5 IN
WEIGHT: 5 LBS

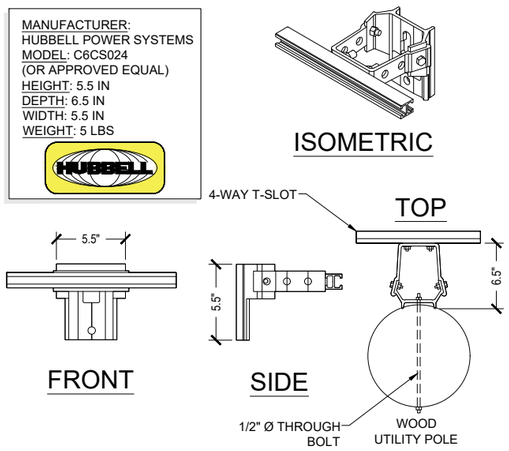

STAND-OFF MOUNT

SCALE N.T.S. | 10

MANUFACTURER:
SIEMENS
MODEL: GNF321R
TYPE-3R DISCONNECT
(OR APPROVED EQUAL)
HEIGHT: 9.9 IN
WIDTH: 8.8 IN
DEPTH: 4.5 IN
WEIGHT: 24 LBS

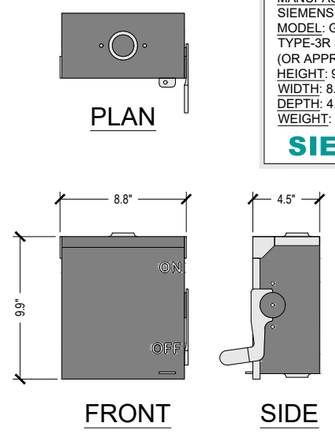

NEMA-3R DISCONNECT SWITCH

SCALE N.T.S. | 7

MANUFACTURER:
VALMONT
MODEL: CLH
(OR APPROVED EQUAL)
HEIGHT: 4 IN
WIDTH: 3 INØ
DEPTH: 1 IN
WEIGHT: <0.1 LBS EA

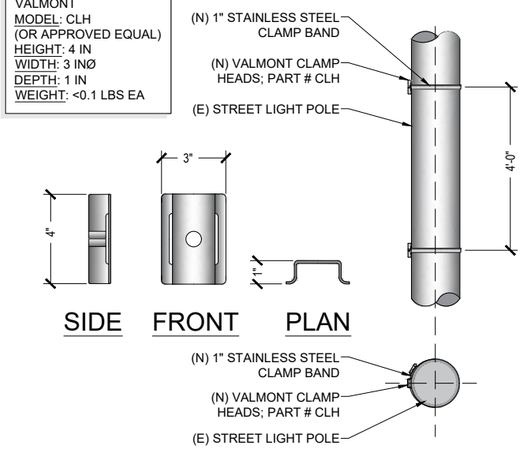

STEEL CLAMP HEAD

SCALE N.T.S. | 4

MANUFACTURER:
ALPHA WIRELESS
MODEL: AW3477-S
HEIGHT: 29.5 IN
DIAMETER: 4.5 IN Ø
WEIGHT: 8.8 LBS
MOUNT WEIGHT: 1.1 LB

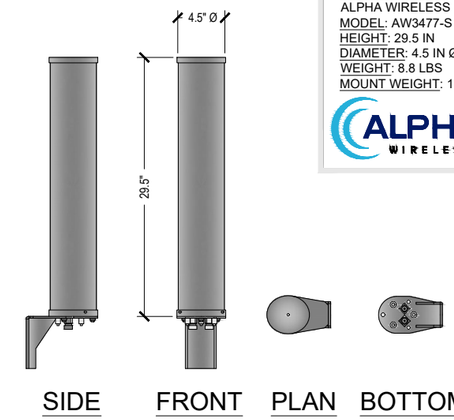

OMNI-DIRECTIONAL ANTENNA

SCALE N.T.S. | 1

MANUFACTURER: HUBBELL
EQUIP.: C6CS012
SIZE A: 6 IN
SIZE B: 12" IN
WEIGHT: 3.50 LBS
*ACCOMMODATES 5/8" MACHINE BOLT & 1/2" LAG SCREW

MANUFACTURER: HUBBELL
EQUIP.: CSTK4
SIZE A: 4-1/2 IN
SIZE B: 7-1/8 IN
SIZE C: 7-3/16 IN
SIZE D: 5.3/8 IN
WEIGHT: .065 LBS

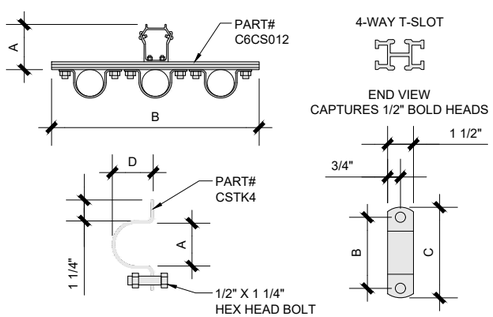

RISER MOUNTING DETAIL

SCALE N.T.S. | 11

MANUFACTURER: RAYCAP
MODEL: RSTAC-3111-P-120
HEIGHT: 13.1 IN
WIDTH: 11.4 IN
DEPTH: 4.4 IN
WEIGHT: 8 LBS

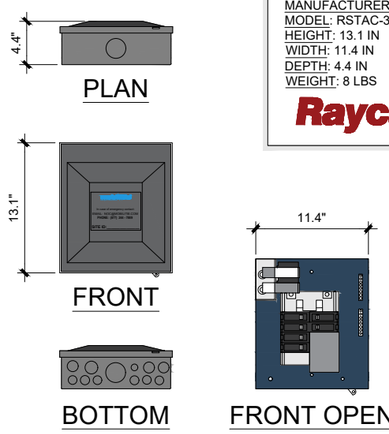

AC DISTRIBUTION PANEL

SCALE N.T.S. | 8

MANUFACTURER: PCTEL
MODEL: 3971D-DH-W
(OR APPROVED EQUAL)
HEIGHT: 2.48 IN
DIAMETER: 2.36 IN
WEIGHT: 0.11 LB

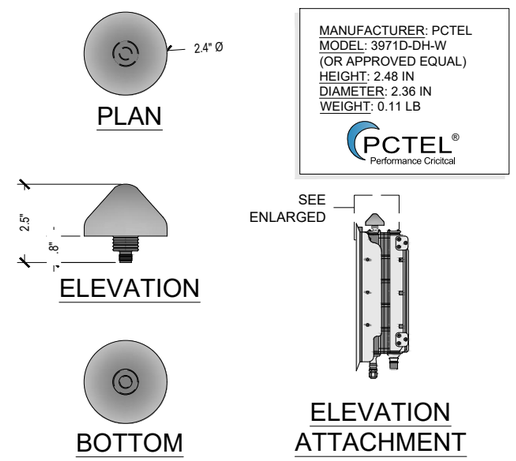

GPS ANTENNA

SCALE N.T.S. | 5

MANUFACTURER:
ALPHA WIRELESS
MODEL: AW3477-S PTM
(OR APPROVED EQUAL)
HEIGHT: 21.5 IN
WIDTH: 3.15 IN
DEPTH: 7.16 IN
WEIGHT: 1.1 LB

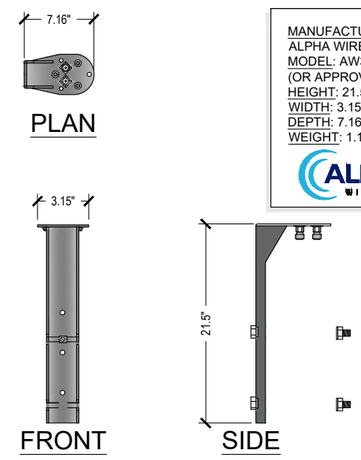

NOTE:
BRACKET SHOWN WITH THROUGH-BOLT CONFIGURATION.

POLE-TOP MOUNT

SCALE N.T.S. | 2

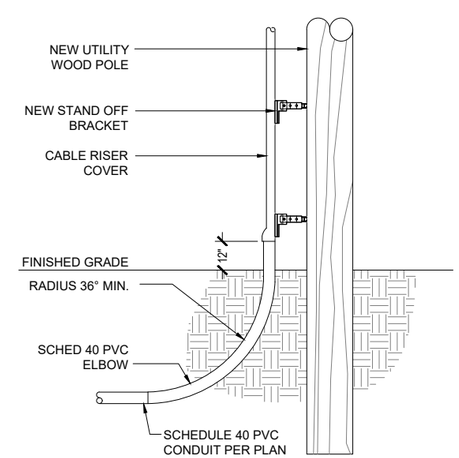

RISER DETAIL

SCALE N.T.S. | 12

MANUFACTURER: EATON
MODEL: U114TB
(OR APPROVED EQUAL)
HEIGHT: 24 IN
WIDTH: 12 IN
DEPTH: 4.63 IN
WEIGHT: 21 LBS

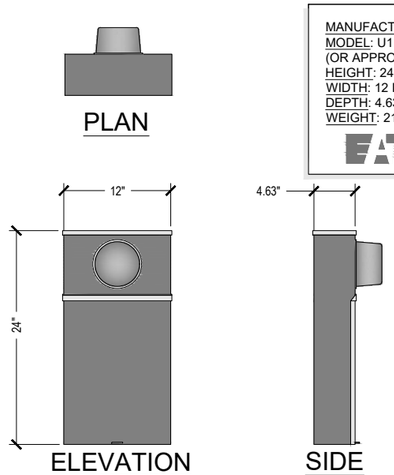

METER SOCKET

SCALE N.T.S. | 9

MANUFACTURER:
AIRSPAN
MODEL: AH 1000D
(OR APPROVED EQUAL)
HEIGHT: 18.9 IN
WIDTH: 9.6 IN
DEPTH: 7.48 IN
WEIGHT: 34.14 LBS
MOUNT WEIGHT: 2.04 LBS

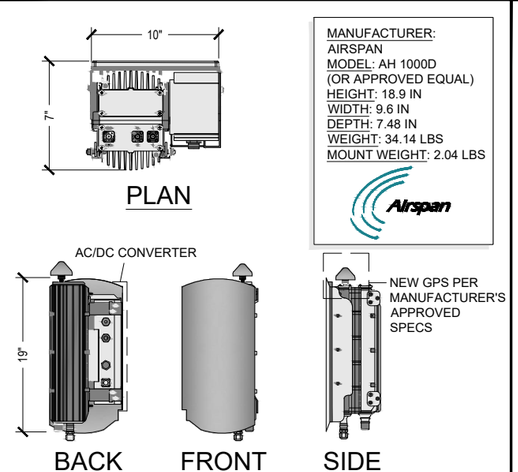

REMOTE RADIO HEAD

SCALE N.T.S. | 6

MANUFACTURER: AIRSPAN
MODEL: iR460
(OR APPROVED EQUAL)
HEIGHT: 13 IN
DIAMETER: 7 INØ
DEPTH: 7 IN
WEIGHT: 8.8 LBS

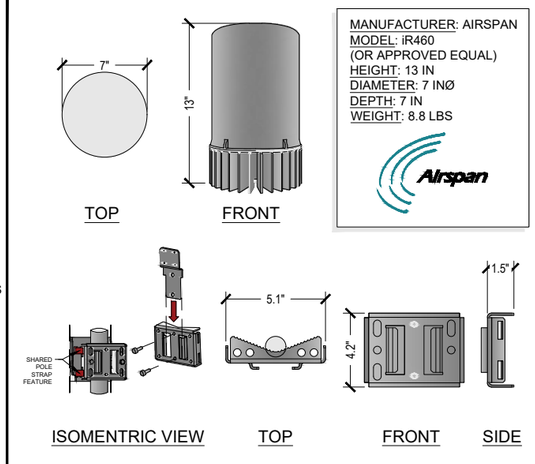

UE RELAY

SCALE N.T.S. | 3

mobilitie
intelligent infrastructure

MOBILITIE, LLC

DRAWN BY:	V.C.
DATE:	07/14/2016

REV	DATE	DESCRIPTION	BY
0	07/14/2016	90% CONSTRUCTION	V.C.

PRELIMINARY NOT FOR CONSTRUCTION

IT IS A VIOLATION OF LAW FOR ANY PERSON, UNLESS THEY ARE ACTING UNDER THE DIRECTION OF A LICENSED PROFESSIONAL ENGINEER, TO ALTER THIS DOCUMENT.

SITE ID:
9WAB001600A
8200 MARTIN WAY E. LACEY, WA 98516 ,
MARTIN WAY E. & MARVIN RD. NE.

NEW UTILITY WOOD POLE

SHEET TITLE
DETAILS

SHEET NUMBER
D-1

NOT USED | SCALE N.T.S. | 10

NOT USED | SCALE N.T.S. | 7

NOT USED | SCALE N.T.S. | 4

OWNER / OPERATOR NOTE:
SITE ID LABEL TO BE AFFIXED WITH TZeS241 LABELING TAPE OR EQUIVALENT BLACK ON WHITE LABELING TAPE OF AT LEAST 18mm WIDTH WITH EXTRA-STRENGTH ADHESIVE. USE ANY COMPATIBLE P-TOUCH LABEL MAKER. TEXT SHOULD BE PRINTED IN ALL CAPS WITH A MINIMUM HEIGHT OF 1/2".

EMERGENCY CONTACT SIGN | SCALE N.T.S. | 1

NOT USED | SCALE N.T.S. | 11

NOT USED | SCALE N.T.S. | 8

NOT USED | SCALE N.T.S. | 5

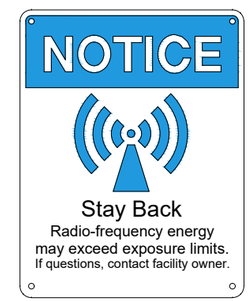

ANTENNA SIGNAGE:
ON WOOD POLES - SIGN ON ALUMINUM WITH SS SCREW TO THE POLE
ON METAL POLES - ADHESIVE VINYL OR PLACARD STRAPPED WITH SS TIES
ON CONCRETE / COMPOSITE - PLACARD STRAPPED WITH SS TIES

SIGN PLACEMENT:
AFFIX TO THE STRUCTURE 3-4' BELOW THE COMMERCIAL RF ANTENNA(S)
SIZE APPROX. 8" x 5.5"

ANTENNA SIGNAGE | SCALE N.T.S. | 2

NOT USED | SCALE N.T.S. | 12

NOT USED | SCALE N.T.S. | 9

NOT USED | SCALE N.T.S. | 6

NOT USED | SCALE N.T.S. | 3

mobilitie
intelligent infrastructure

MOBILITIE, LLC

DRAWN BY:	V.C.
DATE:	07/14/2016

REV	DATE	DESCRIPTION	BY
0	07/14/2016	90% CONSTRUCTION	V.C.

PRELIMINARY NOT FOR CONSTRUCTION

IT IS A VIOLATION OF LAW FOR ANY PERSON, UNLESS THEY ARE ACTING UNDER THE DIRECTION OF A LICENSED PROFESSIONAL ENGINEER, TO ALTER THIS DOCUMENT.

SITE ID:
9WAB001600A
8200 MARTIN WAY E. LACEY, WA 98516 ,
MARTIN WAY E. & MARVIN RD. NE.

NEW UTILITY WOOD POLE

SHEET TITLE

DETAILS

SHEET NUMBER

D-2

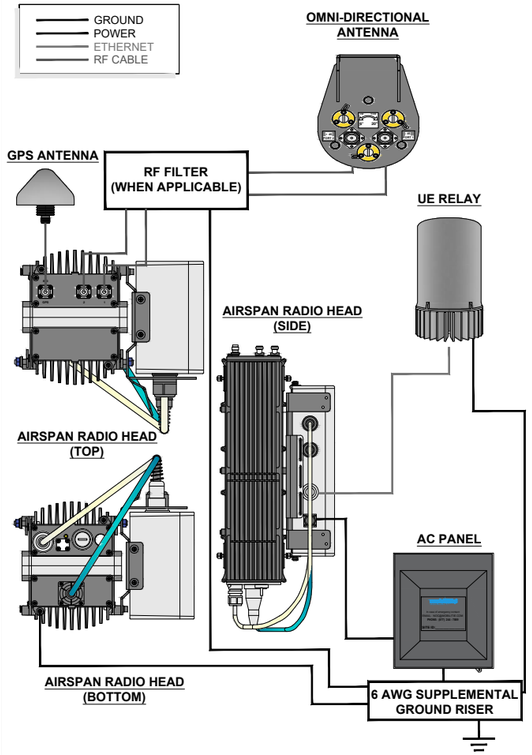

WIRING DIAGRAM

SCALE N.T.S. | 4

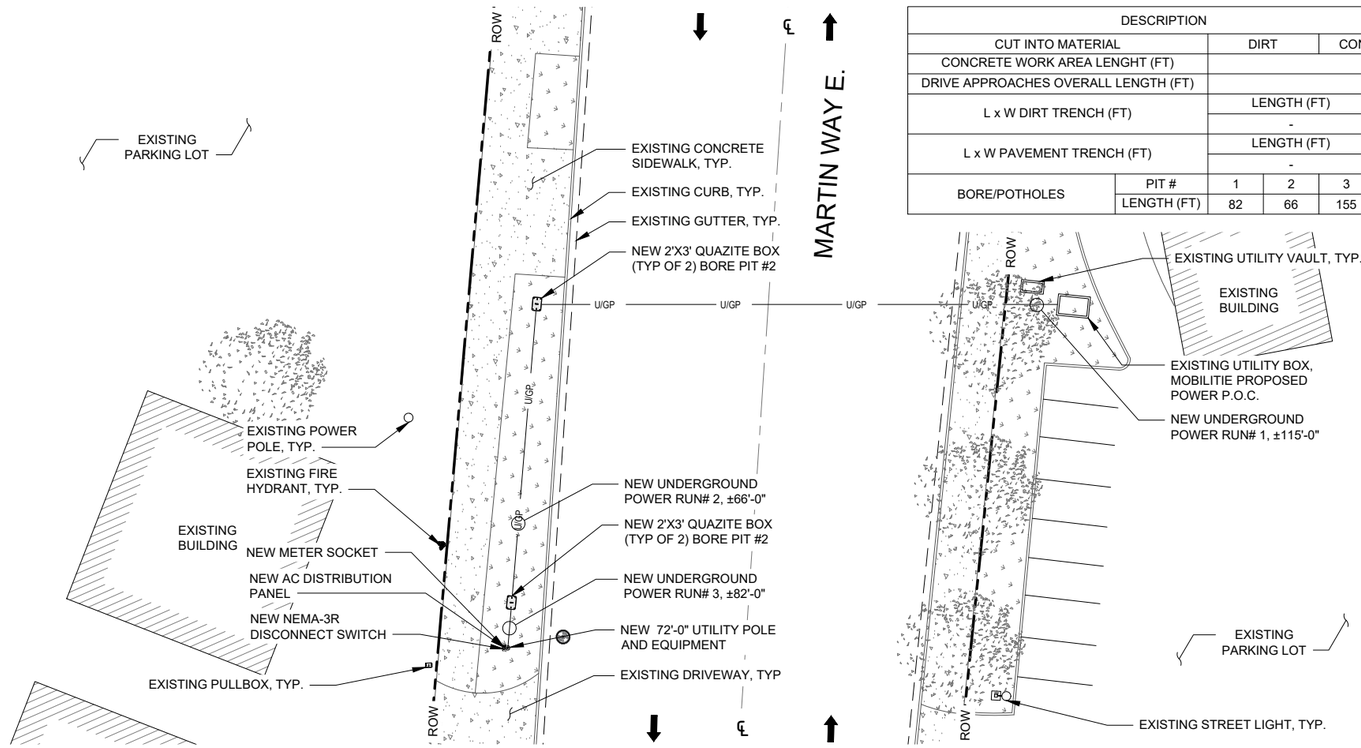

DESCRIPTION							
CUT INTO MATERIAL		DIRT		CONCRETE		ASPHALT	
CONCRETE WORK AREA LENGHT (FT)		203					
DRIVE APPROACHES OVERALL LENGTH (FT)		-					
L x W DIRT TRENCH (FT)		LENGTH (FT)			DEPTH (FT)		
		-			-		
L x W PAVEMENT TRENCH (FT)		LENGTH (FT)			DEPTH (FT)		
		-			-		
BORE/POTHOLES	PIT #	1	2	3	4	5	6
	LENGTH (FT)	82	66	155	-	-	-

UTILITY PLAN

24"x36" SCALE: 1/16" = 1'-0"
11"x17" SCALE: 1/32" = 1'-0"
16' 12' 8' 4' 0' 16'

1

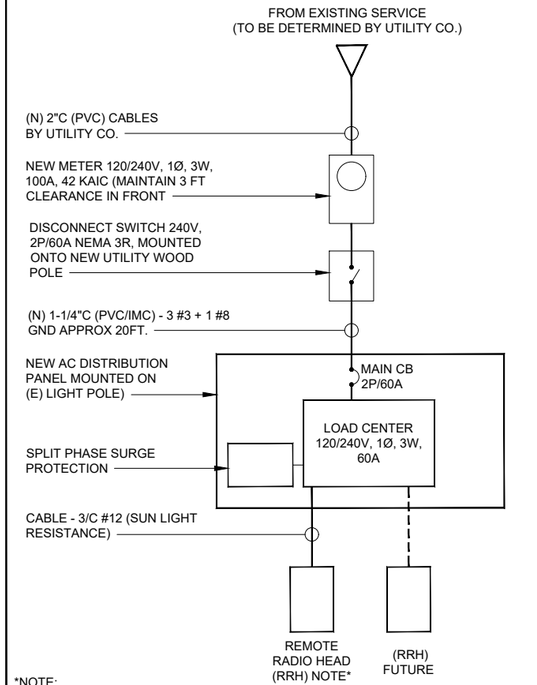

*NOTE:
RECTIFIER IS FURNISHED AND INSTALLED INSIDE RRH UNIT.

ONE-LINE DIAGRAM

24"x36" SCALE: NTS
11"x17" SCALE: NTS | 5

POLE INFORMATION

SITE NAME:	9WAB001600A
INSTALLATION TYPE:	ATTACHED TO NEW
POLE HEIGHT:	72'-0"
LAT/LONG:	47.056502, -122.766526
PROPOSED ATTACHMENT HEIGHT:	TBD
INSTALLATION TYPE:	UTILITY WOOD POLE
RECORD POLE OWNER:	TBD
RECORD POLE ID NUMBER:	
RECORD POLE DIAMETER:	TBD
DESCRIBE AC POC ON EXISTING POLE:	TBD
POWER PROVIDER:	TBD
LENGTH OF PROPOSED POWER POC:	TBD
REQUIRED TO BRING POWER POC TO SITE:	TBD
LAT/LONG OF POWER POC:	47.056502, -122.766526
VISABLE WIRED BACKHAUL OPTION:	FIBER DISTRIBUTION BOX/ETC.
SPECIAL SITE NOTES:	XXXXXXX

VOLTAGE: 120/240V, 1 PHASE, 3W, 100A, 10KAIC
MAIN CB: 2P/60A BUS: 100A
LOCATION: MOUNTED ON LIGHT POLE
NEMA: 3R

PANEL "A"

VOLT AMPS PHASE A	VOLT AMPS PHASE B	DESCRIPTION	POLE	BKR	CKT	A	B	CKT	BKR	POLE	DESCRIPTION	VOLT AMPS PHASE B	VOLT AMPS PHASE A
1200	-	RECTIFIER 1	1	15	1	●		2	60	2	MAIN CB	-	-
-	1200	RECTIFIER 2 (FUTURE)	1	15	3		●	4	-	-	-	-	-
-	-	SPARE	1	15	5	●		6	20	1	G.F.I.	360	-
1200	1200	VA/LINE										360	-

PHASE A = 1,560 PHASE A = 1,200

CONNECTED LOAD = 2,760 VA
DESIGN AMP. = 11.5A

NOTE:
RECTIFIER (AC/DC CONVERTER) IS FURNISHED AND INSTALLED INSIDE REMOTE RADIO HEAD (RRH)

POLE INFORMATION / NEW PANEL SCHEDULE

24"x36" SCALE: NTS
11"x17" SCALE: NTS | 3

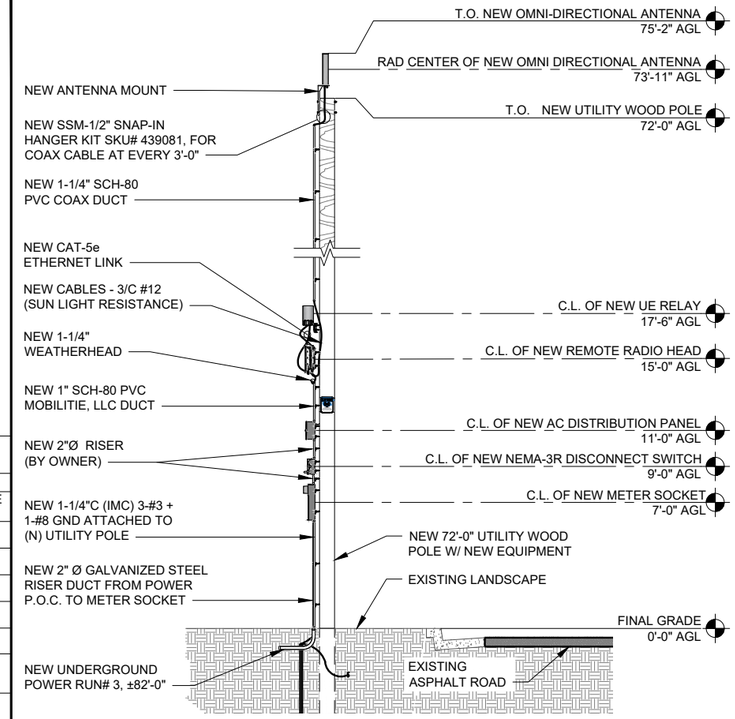

UTILITY ELEVATION

24"x36" SCALE: 3/16" = 1'-0"
11"x17" SCALE: 3/32" = 1'-0"
4' 2' 0' 4'

2

mobilitie
intelligent infrastructure

MOBILITIE, LLC

DRAWN BY:	V.C.
DATE:	07/14/2016

REV	DATE	DESCRIPTION	BY
0	07/14/2016	90% CONSTRUCTION	V.C.

PRELIMINARY NOT FOR CONSTRUCTION

IT IS A VIOLATION OF LAW FOR ANY PERSON, UNLESS THEY ARE ACTING UNDER THE DIRECTION OF A LICENSED PROFESSIONAL ENGINEER, TO ALTER THIS DOCUMENT.

SITE ID: 9WAB001600A
8200 MARTIN WAY E. LACEY, WA 98516 , MARTIN WAY E. & MARVIN RD. NE.

NEW UTILITY WOOD POLE

SHEET TITLE
ELECTRICAL PLAN

SHEET NUMBER
E-1

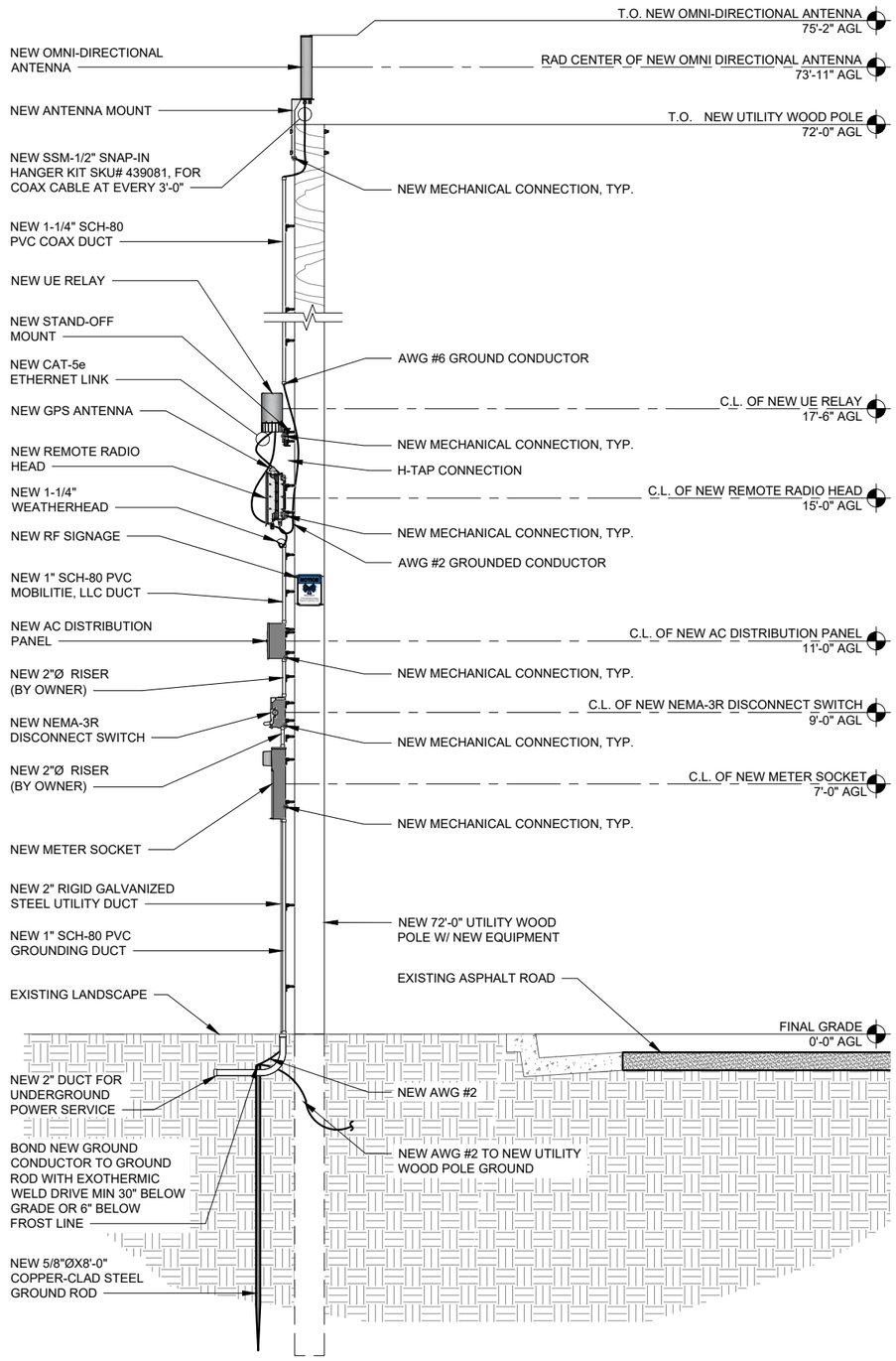

GROUNDING SCHEMATIC

24"x36" SCALE: 1/2" = 1'-0"
11"x17" SCALE: 1/4" = 1'-0"

2' 1' 0" 2'

4

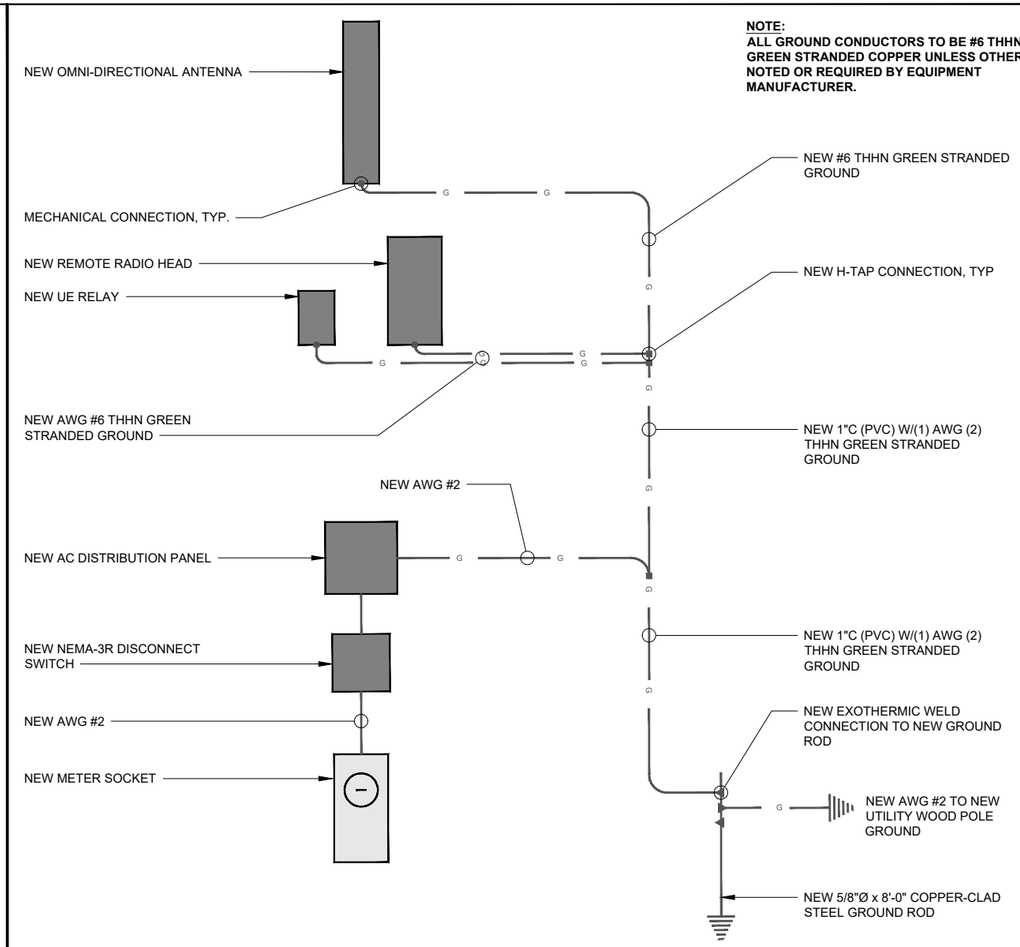

NOTE:
ALL GROUND CONDUCTORS TO BE #6 THHN/THWN GREEN STRANDED COPPER UNLESS OTHERWISE NOTED OR REQUIRED BY EQUIPMENT MANUFACTURER.

GROUNDING SCHEMATIC

24"x36" SCALE: NTS
11"x17" SCALE: NTS

1

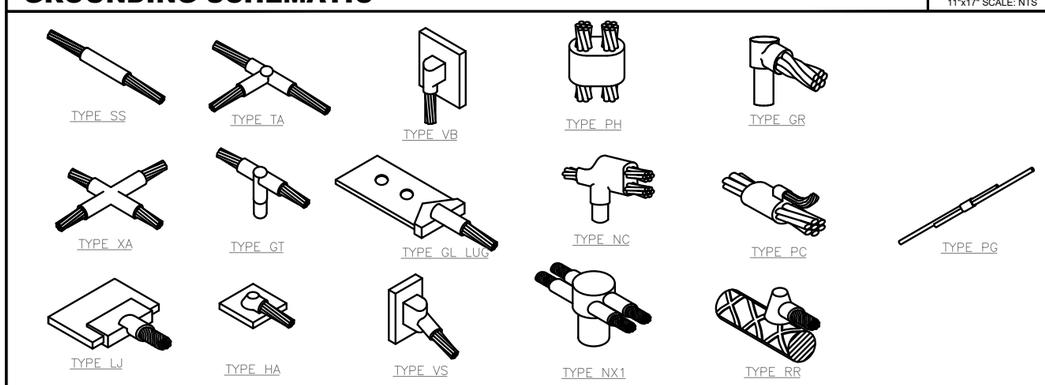

TYPICAL CADWELD TYPES

24"x36" SCALE: NTS
11"x17" SCALE: NTS

2

1. **GROUND BONDS**: ALL BONDS ARE TO BE MADE WITH #6 AWG STRANDED COPPER IN GREEN INSULATION. (ATT-TP-76416 7, 6.7)
2. **EXTERIOR UNIT BONDS**: ALL METALLIC OBJECTS SHALL BE BONDED TO THE GROUND ROD. (ATT-TP-76416 7, 12.6)
3. **GROUND ROD**: UL LISTED COPPER CLAD STEEL GROUND ROD WITH MINIMUM DIAMETER OF 5/8" AND MINIMUM LENGTH OF 8 FEET. ALL GROUND RODS MAY BE INSTALLED WITH INSPECTION SLEEVES. GROUND RODS SHALL BE DRIVEN TO A MINIMUM DEPTH OF 30" BELOW GRADE OR 6 INCHES BELOW FROST LINE. (ATT-TP-76416 1.4 / 2.2, 3, 10)

GROUNDING NOTES

3

mobilitie
intelligent infrastructure

MOBILITIE, LLC

DRAWN BY:	V.C.
DATE:	07/14/2016

REV	DATE	DESCRIPTION	BY
0	07/14/2016	90% CONSTRUCTION	V.C.

PRELIMINARY NOT FOR CONSTRUCTION

IT IS A VIOLATION OF LAW FOR ANY PERSON, UNLESS THEY ARE ACTING UNDER THE DIRECTION OF A LICENSED PROFESSIONAL ENGINEER, TO ALTER THIS DOCUMENT.

SITE ID:
9WAB001600A
8200 MARTIN WAY E. LACEY, WA 98516 ,
MARTIN WAY E. & MARVIN RD. NE.

NEW UTILITY WOOD POLE

SHEET TITLE

GROUNDING PLAN

SHEET NUMBER

G-1

MUTCD 2014 Sign Charts

Sheet 13 of 14 - Temporary Traffic Control Signs

This chart contains commonly used federal 2009 MUTCD sign, and is not meant to be used as a comprehensive sign chart or a stand-alone sign design tool. Otherwise, federal 2009 MUTCD sign designations are shown (formerly known as sign codes).

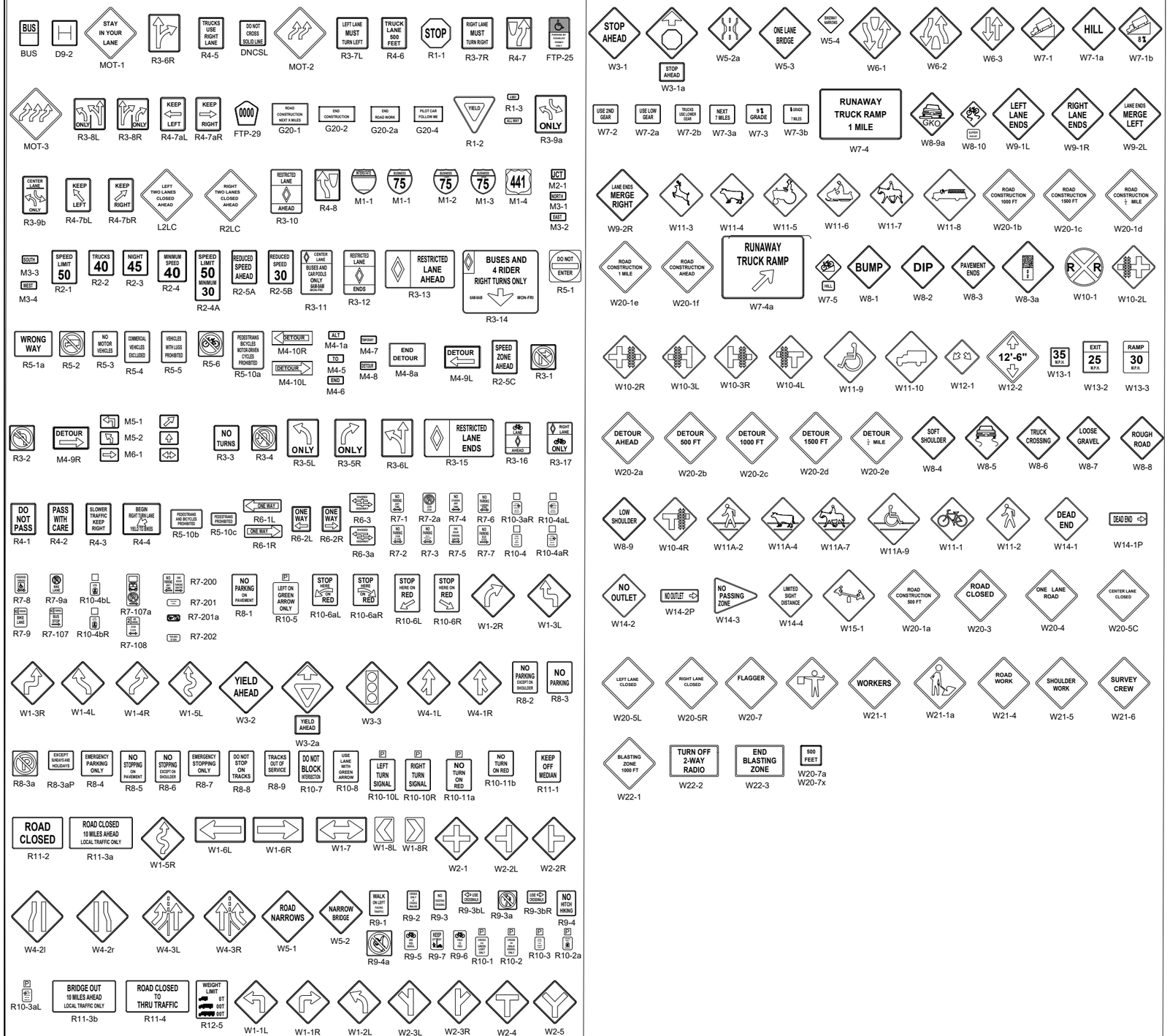

SIGN LEGEND

mobilitie
intelligent infrastructure

MOBILITIE, LLC

DRAWN BY:	V.C.
DATE:	07/14/2016

REV	DATE	DESCRIPTION	BY
0	07/14/2016	90% CONSTRUCTION	V.C.

PRELIMINARY NOT FOR CONSTRUCTION

IT IS A VIOLATION OF LAW FOR ANY PERSON, UNLESS THEY ARE ACTING UNDER THE DIRECTION OF A LICENSED PROFESSIONAL ENGINEER, TO ALTER THIS DOCUMENT.

SITE ID:
9WAB001600A
8200 MARTIN WAY E. LACEY, WA 98516 ,
MARTIN WAY E. & MARVIN RD. NE.

NEW UTILITY WOOD POLE

SHEET TITLE
TRAFFIC CONTROL PLAN

SHEET NUMBER
TC-1

**SEE TC-1 FOR SIGN SPECIFICATIONS

CONTACT REGIONAL TRANSPORTATION DISTRICT (RTD) 72 HOURS PRIOR TO START OF WORK FOR TEMPORARY RELOCATION OF BUS STOP
RTD : 303-299-2004

HOURS OF OPERATION: 6 A.M. TO 10 P.M.
CROSS STREET: MARTIN WAY E. & MARVIN RD. NE.
WORK TYPE: UTILITIES

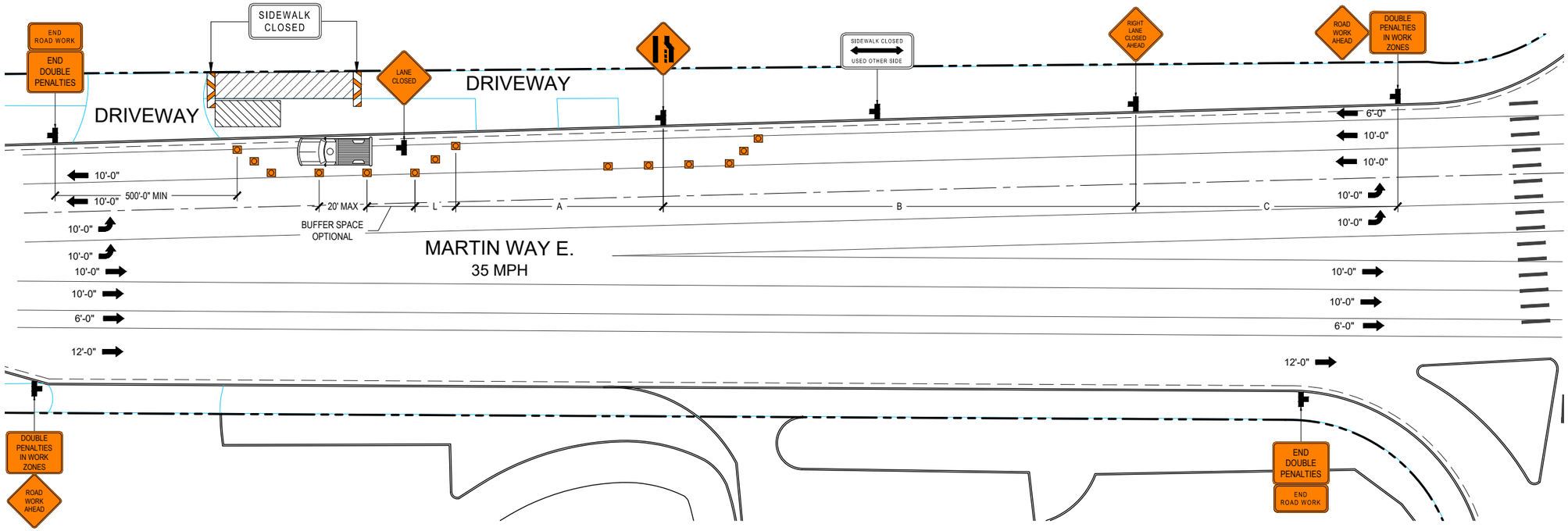

DIMENSIONS	FEET
A (DISTANCE BETWEEN SIGNS)	100
B (DISTANCE BETWEEN SIGNS)	100
C (DISTANCE BETWEEN SIGNS)	100
L (MERGING TAPER LENGTH)	320
MAXIMUM TAPER CHANNELIZING DEVICE SPACING	40
MAXIMUM TANGENT CHANNELIZING DEVICE SPACING	80

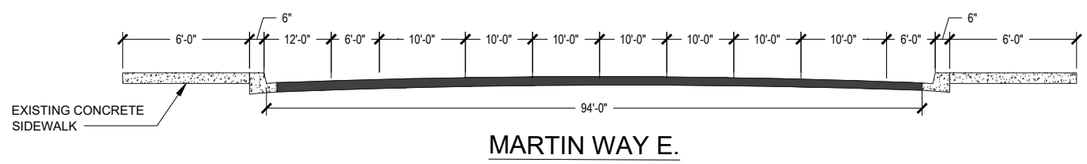

LINE TYPE LEGEND	
	CENTER LINE
	LANES
	GUTTER
	CURB/SIDEWALK

TRAFFIC CONTROL PLAN

24"x36" SCALE: NTS
11"x17" SCALE: NTS

1

GENERAL NOTES

1. Work operations shall be confined to one traffic lane, leaving the opposite lane open to traffic.
2. Additional one-way control may be effected by the following means:
   - Flag-carrying vehicle
   - Official vehicle
   - Pilot vehicle
   - Traffic signal
3. The "ONE LANE ROAD" signs are to be fully covered and the "FLAGGER" signs either removed or fully covered when no work is being performed and the roadway is open to two-way traffic
4. When a side road intersects the roadway within the TTC zone, additional TTC devices shall be placed in accordance with applicable TCZ Indexes.
5. The two channelizing devices directly in front of the work area and the one channelzing device directly at the end of the work area may be omitted provided vehicles in the work area have high-intensity rotating, flashing, oscillating, or strobe lights operating.
6. For general TCZ requirements and additional information, refer to MUTCD.

GENERAL NOTES 4

GENERAL NOTES

1. RETRO-REFELCTIVE SIGN SHEETING SHALL CONFORM TO SECTION 716. LATEST REVISION, OF THE UNIFORM STANDARD SPECIFICATIONS.
2. SIGN LEGENDS AND BORDERS SHALL COMPLY WITH THE REQUIREMENTS OF THE MANUAL ON UNIFORM TRAFFIC CONTROL DEVICES (MUTCD), LATEST EDITION.
3. SIGN SHALL BE MOUNTED IN CONFORMANCE WITH PART 6, MUTCD, LATEST EDITION.
4. THE "DOUBLE PENALTIES IN WORK ZONES" SIGN SHOULD BE MOUNTED WITH THE FIRST SIGN IN THE ADVANCED WARNING SIGN SERIES, TYPICALLY THE "ROAD WORK AHEAD" SIGN.
5. "END WORK ZONES" SIGN SHALL BE MOUNTED AT THE END OF THE WORK ZONE WITH THE "END DOUBLE PENALTY" SIGN, IF APPLICABLE, ON THE SAME DEVICE OR POST.
6. THE DESIGNATION OF WORK ZONE, INCLUDING MARKING OF THE DOUBLE PENALTIES, SHALL NOT BE REQUIRED ON STREETS POSTED AT 25 MPH OR LESS AND ARE THE ACCESS TO OR APPURTENANT TO A RESIDENTIAL AREA.

DURATION NOTES

1. "ROAD WORK AHEAD" and the "BE PREPARED TO STOP" signs may be omitted if all of the following conditions are met:
   a. Work operations are 60 minutes or less
   b. Speed limit is 45 MPH or less
   c. No sight obstructions to vehicles approaching the work area for a distance equal to the buffer space
   d. Vehicles in the work area have high-intensity, rotating, flashing, oscillating, or strobe lights operating
   e. Volume and complexity of the roadway has been considered

DURATION NOTES 3

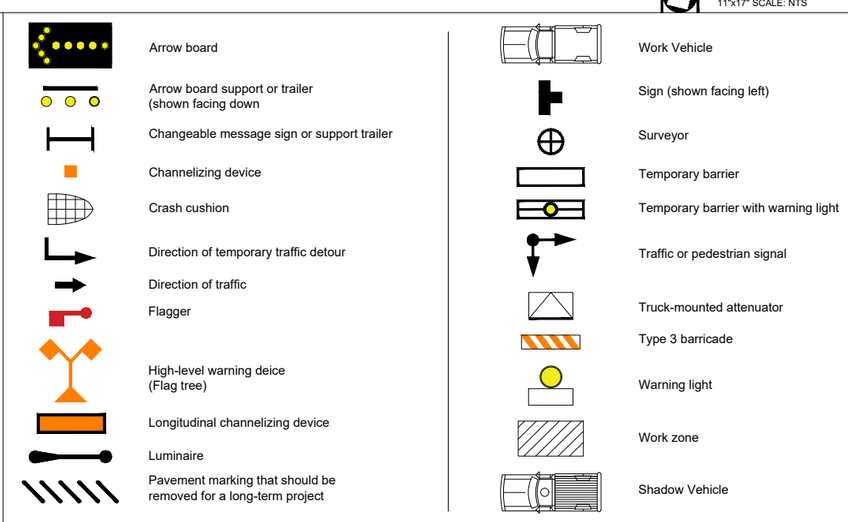

LEGEND 2

mobilitie
intelligent infrastructure

MOBILITIE, LLC

DRAWN BY:	V.C.
DATE:	07/14/2016

REV	DATE	DESCRIPTION	BY
0	07/14/2016	90% CONSTRUCTION	V.C.

PRELIMINARY NOT FOR CONSTRUCTION

IT IS A VIOLATION OF LAW FOR ANY PERSON, UNLESS THEY ARE ACTING UNDER THE DIRECTION OF A LICENSED PROFESSIONAL ENGINEER, TO ALTER THIS DOCUMENT.

SITE ID:
9WAB001600A
8200 MARTIN WAY E. LACEY, WA 98516 , MARTIN WAY E. & MARVIN RD. NE.

NEW UTILITY WOOD POLE

SHEET TITLE
TRAFFIC CONTROL PLAN

SHEET NUMBER
TC-2

mobilitie®
intelligent infrastructure

SITE ID: 9WAX000687A

1010 SLEATER KINNEY RD. SE
LACEY, WA 98503
SLEATER KINNEY RD. SE & PACIFIC AVE. SE

NEW STEEL UTILITY POLE

811 Dig Alert
Know what's below. Call before you dig.
Call Two Working Days Before You Dig!
1-800-STAKE-IT

DO NOT SCALE DRAWINGS

SUBCONTRACTOR SHALL VERIFY ALL PLANS, EXISTING DIMENSIONS & FIELD CONDITIONS ON THE JOB SITE & SHALL IMMEDIATELY NOTIFY THE ENGINEER IN WRITING OF ANY DISCREPANCIES BEFORE PROCEEDING WITH THE WORK OR BE RESPONSIBLE FOR SAME.

GENERAL NOTES

THE FACILITY IS NOT FOR HUMAN HABITATION. A TECHNICIAN WILL VISIT THE SITE AS REQUIRED FOR ROUTINE MAINTENANCE. THE PROJECT WILL NOT RESULT IN ANY SIGNIFICANT DISTURBANCE OR EFFECT ON DRAINAGE; NO SANITARY SEWER SERVICE, POTABLE WATER, OR TRASH DISPOSAL IS REQUIRED AND NO COMMERCIAL SIGNAGE IS PROPOSED.

SITE INFORMATION

APPLICANT:	MOBILITIE
APPLICANT ADDRESS:	2955 RED HILL AVENUE, STE. 200, COSTA MESA, CA 92626
PUBLIC ROW/PRIVATE PROPERTY:	PUBLIC ROW
NEAREST ADDRESS:	1010 SLEATER KINNEY RD. SE LACEY, WA 98503
SITE LATITUDE:	47° 2' 20.07" N (47.038914°)
SITE LONGITUDE:	-122° 50' 1.07" W (-122.833632°)
GIS TYPE:	(NAD83)
GROUND ELEVATION:	±40 AMSL
COUNTY:	THURSTON COUNTY
JURISDICTION:	THURSTON COUNTY

PROJECT TEAM

MOBILITIE, LLC
2955 RED HILL AVENUE, STE. 200,
COSTA MESA, CA 92626
APPLICANT: DAVID GRIFFITH
PHONE: (530) 906-1233
EMAIL: robert.griffith@mobilitie.com

CORTEL
2030 MAIN STREET
IRVINE, CA 92614
CONTACT: JASON OFFINEER
PHONE: (619) 370-4859
EMAIL: Jason.Offineer@cortel-llc.com

LOCATION MAPS

VICINITY MAP

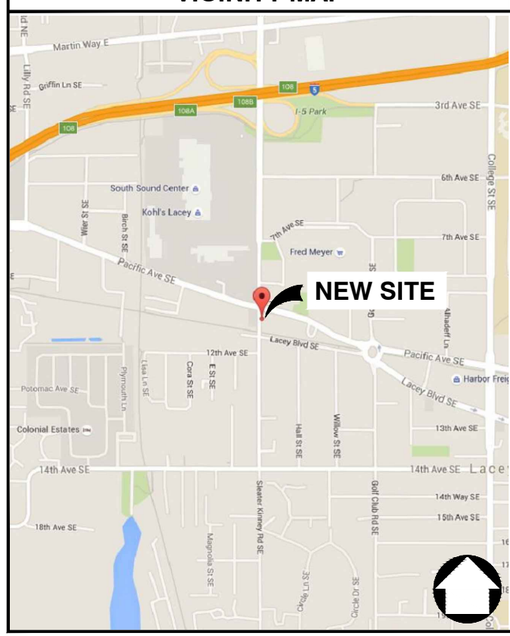

SITE LOCATION

PROJECT DESCRIPTION

MOBILITIE PROPOSES TO CONSTRUCT A NEW TRANSPORT SITE WITHIN AN EXISTING RIGHT OF WAY. THE SCOPE WILL CONSIST OF THE FOLLOWING:

- INSTALL ONE (1) - PROPOSED 120' UTILITY POLE
- INSTALL ONE (1) - PPC
- INSTALL ONE (1) - METER SOCKET
- INSTALL FOUR (4) - MICROWAVE DISHES
- INSTALL ONE (1) - 2X3 QUAZITE BOX

ENGINEERING

- 2012 INTERNATIONAL BUILDING CODE
- 2014 NATIONAL ELECTRICAL CODE
- TIA/EIA-222-G-2 OR LATEST EDITION
- LOCAL BUILDING/PLANNING CODE

DRAWING INDEX

SHEET NO:	SHEET TITLE
T-1	TITLE SHEET
T-2	GENERAL NOTES
T-3	GENERAL NOTES
TC-1	TRAFFIC CONTROL PLANS
A-1	SITE PLAN
A-2	NORTH & EAST ELEVATIONS
D-1	EQUIPMENT DETAILS
E-1	ELECTRICAL PLAN
G-1	GROUNDING PLAN
S-1	STRUCTURAL DETAILS

mobilitie®
intelligent infrastructure

MOBILITIE, LLC

DRAWN BY:	CAM
DATE:	06/14/16

REV	DATE	DESCRIPTION	BY
0	06/14/16	90% ISSUED FOR REVIEW	CAM
B	07/17/16	90% ISSUED FOR REVIEW	ANW

PRELIMINARY NOT FOR CONSTRUCTION

IT IS A VIOLATION OF LAW FOR ANY PERSON, UNLESS THEY ARE ACTING UNDER THE DIRECTION OF A LICENSED PROFESSIONAL ENGINEER, TO ALTER THIS DOCUMENT.

SITE ID:
9WAX000687A
1010 SLEATER KINNEY RD. SE,
LACEY, WA 98503
SLEATER KINNEY RD. SE & PACIFIC AVE. SE
UTILITY POLE

SHEET TITLE
TITLE SHEET

SHEET NUMBER
T-1

GENERAL CONSTRUCTION NOTES

1. ALL WORK SHALL CONFORM TO THE REQUIREMENTS OF THE LOCAL BUILDING CODE, THE LATEST EDITION AND ALL OTHER APPLICABLE CODES AND ORDINANCES.
2. CONTRACTOR SHALL CONSTRUCT SITE IN ACCORDANCE WITH THESE DRAWINGS AND CONSTRUCTION SPECIFICATIONS 80-T1196-1 REV H. THE SPECIFICATION IS THE RULING DOCUMENT AND ANY DISCREPANCIES BETWEEN THE SPECIFICATION AND THESE DRAWINGS SHOULD BE BROUGHT TO THE ATTENTION OF THE ENGINEER PRIOR TO PROCEEDING WITH CONSTRUCTION
3. CONTRACTOR SHALL VISIT THE JOB SITE AND SHALL FAMILIARIZE HIMSELF WITH ALL CONDITIONS AFFECTING THE PROPOSED WORK AND SHALL MAKE PROVISIONS AS TO THE COST THEREOF. CONTRACTOR SHALL BE RESPONSIBLE FOR FAMILIARIZING HIMSELF WITH ALL CONTRACT DOCUMENTS, FIELD CONDITIONS AND DIMENSIONS AND CONFIRMING THAT THE WORK MAY BE ACCOMPLISHED AS SHOWN PRIOR TO PROCEEDING WITH CONSTRUCTION. ANY DISCREPANCIES SHALL BE BROUGHT TO THE ATTENTION OF THE ENGINEER PRIOR TO THE COMMENCEMENT OF WORK. NO COMPENSATION WILL BE AWARDED BASED ON CLAIM OF LACK OF KNOWLEDGE OF FIELD CONDITIONS
4. PLANS ARE NOT TO BE SCALED. THESE PLANS ARE INTENDED TO BE A DIAGRAMMATIC OUTLINE ONLY UNLESS OTHERWISE NOTED. THE WORK SHALL INCLUDE FURNISHING MATERIALS, EQUIPMENT AND APPURTENANCES, AND LABOR NECESSARY TO EFFECT ALL INSTALLATIONS AS INDICATED ON THE DRAWINGS. OWNER PROVIDED MATERIALS WILL INCLUDE THE FOLLOWING, UNLESS NOTED OTHERWISE:
   A) TRANSMITTER
   B) COPPER OR STEEL SECTIONS PROVIDE BY CONTRACTOR
   C) MOUNTING BRACKETS, GPS ANTENNAS AND KU ANTENNAS
   D) UHF COAX AND HANGERS
   E) E-2 FOR SPECIALIZED TRANSFORMERS PROVIDED BY CONTRACTOR
   F) SHELTERS FURNISHED IN FACTORY W/ HVAC EQUIPMENT AND ELECTRICAL DISTRIBUTION PANEL
   G) INTEGRATED LOAD CENTER
5. DIMENSIONS SHOWN ARE TO FINISH SURFACES UNLESS OTHERWISE NOTED. SPACING BETWEEN EQUIPMENT IS REQUIRED CLEARANCE. THEREFORE, IT IS CRITICAL TO FIELD VERIFY DIMENSIONS, SHOULD THERE BE ANY QUESTIONS REGARDING THE CONTRACT DOCUMENTS, EXISTING CONDITIONS AND/OR DESIGN INTENT, THE CONTRACTOR SHALL BE RESPONSIBLE FOR OBTAINING THE WORK.
6. DETAILS ARE INTENDED TO SHOW DESIGN INTENT. MODIFICATIONS MAY BE REQUIRED TO SUIT JOB DIMENSIONS OR CONDITIONS, AND SUCH MODIFICATIONS SHALL BE INCLUDED AS PART OF THE WORK.
7. CONTRACTOR SHALL RECEIVE CLARIFICATION IN WRITING, AND SHALL RECEIVE IN WRITING AUTHORIZATION TO PROCEED BEFORE STARTING WORK ON ANY ITEMS NOT CLEARLY DEFINED OR IDENTIFIED BY THE CONTRACT DOCUMENTS.
8. CONTRACTOR SHALL SUPERVISE AND DIRECT THE WORK USING THE BEST CONSTRUCTION SKILLS AND ATTENTION. CONTRACTOR SHALL BE SOLELY RESPONSIBLE FOR CONSTRUCTION MEANS, METHODS, TECHNIQUES, SEQUENCES AND PROCEDURES AND FOR COORDINATING ALL PORTIONS OF THE WORK UNDER CONTRACT, UNLESS OTHERWISE NOTED.
9. CONTRACTOR SHALL BE RESPONSIBLE FOR THE SAFETY OF THE WORK AREA, ADJACENT AREAS AND BUILDING OCCUPANTS THAT ARE LIKELY TO BE AFFECTED BY THE WORK UNDER THIS CONTRACT. WORK SHALL CONFORM TO ALL OSHA REQUIREMENTS.
10. CONTRACTOR SHALL COORDINATE HIS WORK WITH THE SUPERINTENDENT OF BUILDINGS & GROUNDS AND SCHEDULE HIS ACTIVITIES AND WORKING HOURS IN ACCORDANCE WITH THE REQUIREMENTS.
11. CONTRACTOR SHALL BE RESPONSIBLE FOR COORDINATING HIS WORK WITH THE WORK OF OTHERS AS IT MAY RELATE TO RADIO EQUIPMENT, ANTENNAS AND ANY OTHER PORTIONS OF THE WORK.
12. INSTALL ALL EQUIPMENT AND MATERIALS IN ACCORDANCE WITH MANUFACTURERS RECOMMENDATIONS UNLESS SPECIFICALLY OTHERWISE INDICATED OR WHERE LOCAL CODES OR REGULATIONS TAKE PRECEDENCE.
13. MAKE NECESSARY PROVISIONS TO PROTECT EXISTING SURFACES, EQUIPMENT, IMPROVEMENTS, PIPING ETC. AND IMMEDIATELY REPAIR ANY DAMAGE THAT OCCURS DURING CONSTRUCTION.
14. IN DRILLING HOLES INTO CONCRETE WHETHER FOR FASTENING OR ANCHORING PURPOSES, OR PENETRATIONS THROUGH THE FLOOR FOR CONDUIT RUNS, PIPE RUNS, ETC., MUST BE CLEARLY UNDERSTOOD THAT REINFORCING STEEL SHALL NOT BE DRILLED INTO, CUT OR DAMAGED UNDER ANY CIRCUMSTANCES (UNLESS NOTED OTHERWISE). LOCATIONS OF REINFORCING STEEL ARE NOT DEFINITELY KNOWN AND THEREFORE MUST BE SEARCHED FOR BY APPROPRIATE METHODS AND EQUIPMENT.
15. REPAIR ALL EXISTING WALL SURFACES DAMAGED DURING CONSTRUCTION SUCH THAT THEY MATCH AND BLEND IN WITH ADJACENT SURFACES.
16. SEAL PENETRATIONS THROUGH FIRE RATED AREAS WITH U.L. LISTED AND FIRE CODE APPROVED MATERIALS.
17. KEEP CONTRACT AREA CLEAN, HAZARD FREE, AND DISPOSE OF ALL DIRT, DEBRIS, AND RUBBISH. EQUIPMENT NOT SPECIFIED AS REMAINING ON THE PROPERTY OF THE OWNER SHALL BE REMOVED. LEAVE PREMISES IN CLEAN CONDITION AND FREE FROM PAINT SPOTS, DUST, OR SMUDGES OF ANY NATURE. CONTRACTOR SHALL BE RESPONSIBLE FOR MAINTAINING ALL ITEMS UNTIL COMPLETION OF CONSTRUCTION.
18. MINIMUM BEND RADIUS OF ANTENNA CABLES SHALL BE IN ACCORDANCE WITH CABLE MANUFACTURERS RECOMMENDATIONS.
19. ALL EXISTING INACTIVE SEWER, WATER, GAS, ELECTRIC AND OTHER UTILITIES, WHICH INTERFERE WITH THE EXECUTION OF THE WORK, SHALL BE REMOVED AND/OR CAPPED, PLUGGED OR OTHERWISE DISCONTINUED AT POINTS WHICH WILL NOT INTERFERE WITH THE EXECUTION OF THE WORK, SUBJECT TO APPLICABLE REGULATORY AUTHORITIES
20. CONTRACTOR SHALL MINIMIZE DISTURBANCE TO EXISTING SITE DURING CONSTRUCTION. EROSION CONTROL MEASURES, IF REQUIRED DURING CONSTRUCTION SHALL BE IN CONFORMANCE WITH JURISDICTIONAL OR STATE AND LOCAL GUIDELINES FOR EROSION AND SEDIMENT CONTROL AND COORDINATED WITH LOCAL REGULATORY AUTHORITIES.
21. ALL CONSTRUCTION IS TO ADHERE TO (PER DBA)'S INTEGRATED CONSTRUCTION STANDARDS UNLESS STATE CODE IS MORE STRINGENT.
22. THE INTENT OF THE PLANS AND SPECIFICATIONS IS TO PERFORM THE CONSTRUCTION IN ACCORDANCE PER STATE BUILDING STANDARDS CODE, TITLES 19 AND 24, STATE CODE OF REGULATIONS. SHOULD ANY CONDITIONS DEVELOP NOT COVERED BY THE APPROVED PLANS AND SPECIFICATIONS WHEREIN THE FINISHED WORK WILL NOT COMPLY PER STATE CODE OF REGULATIONS, A CHANGE ORDER DETAILING AND SPECIFYING THE REQUIRED WORK SHALL BE SUBMITTED TO AND APPROVED BY THE JURISDICTION BEFORE PROCEEDING WITH THE WORK.

ELECTRICAL NOTES

1. ELECTRICAL CONTRACTOR SHALL SUPPLY AND INSTALL ANY/ALL ELECTRICAL WORK INDICATED. ANY/ALL CONSTRUCTION SHALL BE IN ACCORDANCE W/DRAWINGS AND ANY/ALL APPLICABLE SPECIFICATIONS. IF ANY PROBLEMS ARE ENCOUNTERED BY COMPLYING WITH THESE REQUIREMENTS, CONTRACTOR SHALL NOTIFY 'CONSTRUCTION MANAGER' AS SOON AS POSSIBLE, AFTER THE DISCOVERY OF THE PROBLEMS, AND SHALL NOT PROCEED WITH THAT PORTION OF WORK, UNTIL THE 'CONSTRUCTION MANAGER' HAS DIRECTED THE CORRECTIVE ACTIONS TO BE TAKEN.
2. ELECTRICAL CONTRACTOR SHALL VISIT THE JOB SITE AND FAMILIARIZE HIMSELF WITH ANY/ALL CONDITIONS AFFECTING ELECTRICAL AND COMMUNICATION INSTALLATION AND MAKE PROVISIONS AS TO THE COST THEREOF. ALL EXISTING CONDITIONS OF ELECTRICAL EQUIP., LIGHT FIXTURES, ETC., THAT ARE PART OF THE FINAL SYSTEM, SHALL BE VERIFIED BY THE CONTRACTOR, PRIOR TO THE SUBMITTING OF HIS BID. FAILURE TO COMPLY WITH THIS PARAGRAPH WILL IN NO WAY RELIEVE CONTRACTOR OF PERFORMING ALL WORK NECESSARY FOR A COMPLETE AND WORKING SYSTEM.
3. ALL WORK SHALL BE PERFORMED IN ACCORDANCE WITH THE LATEST EDITION OF THE NEC AND ALL CODES AND LOCAL ORDINANCES OF THE LOCAL POWER & TELEPHONE COMPANIES HAVING JURISDICTION AND SHALL INCLUDE BUT NOT BE LIMITED TO:
   C - NATIONAL FIRE CODES
   A. UL - UNDERWRITERS LABORATORIES
   B. NEC - NATIONAL ELECTRICAL CODE
   C. NEMA - NATIONAL ELECTRICAL MANUFACTURERS ASSOC.
   D. OSHA - OCCUPATIONAL SAFETY AND HEALTH ACT
   E. SBC - STANDARD BUILDING CODE
4. DO NOT SCALE ELECTRICAL DRAWINGS, REFER TO SITE PLANS AND ELEVATIONS FOR EXACT LOCATIONS OF ALL EQUIPMENT, AND CONFIRM WITH 'CONSTRUCTION MANAGER' ANY SIZES AND LOCATIONS WHEN NEEDED.
5. EXISTING SERVICES: CONTRACTOR SHALL NOT INTERRUPT EXISTING SERVICES WITHOUT WRITTEN PERMISSION OF THE OWNER.
6. CONTRACTOR SHALL PAY FOR ANY/ALL PERMITS, FEES, INSPECTIONS AND TESTING. CONTRACTOR IS TO OBTAIN PERMITS AND APPROVED SUBMITTALS PRIOR TO THE WORK BEGINNING OR ORDERING EQUIPMENT.
7. THE TERM "PROVIDE" USED IN CONSTRUCTION DOCUMENTS AND SPECIFICATIONS, INDICATES THAT THE CONTRACTOR SHALL FURNISH AND INSTALL.
8. CONTRACTOR SHALL CONFIRM WITH LOCAL UTILITY COMPANY ANY/ALL REQUIREMENTS SUCH AS THE: LUG SIZE RESTRICTIONS, CONDUIT ENTRY, SIZE OF TRANSFORMERS, SCHEDULED DOWNTIME FOR THE OWNERS' CONFIRMATION, ETC... ANY/ALL CONFLICTS SHALL BE BROUGHT TO THE ATTENTION OF THE CONSTRUCTION MANAGER, PRIOR TO BEGINNING ANY WORK.
9. MINIMUM WIRE SIZE SHALL BE #12 AWG, NOT INCLUDING CONTROL WIRING, UNLESS NOTED OTHERWISE. ALL CONDUCTORS SHALL BE COPPER WITH THWN INSULATION.
10. OUTLET BOXES SHALL BE PRESSED STEEL IN DRY LOCATIONS, CAST ALLOY WITH THREADED HUBS IN WET/DAMP LOCATIONS AND SPECIAL ENCLOSURES FOR OTHER CLASSIFIED AREAS.
11. IT IS NOT THE INTENT OF THESE PLANS TO SHOW EVERY MINOR DETAIL OF THE CONSTRUCTION. CONTRACTOR IS EXPECTED TO FURNISH AND INSTALL ALL ITEMS FOR A COMPLETE ELECTRICAL SYSTEM AND PROVIDE ALL REQUIREMENTS FOR THE EQUIPMENT TO BE PLACED IN PROPER WORKING ORDER.
12. ELECTRICAL SYSTEM SHALL BE AS COMPLETELY AND EFFECTIVELY GROUNDED, AS REQUIRED BY SPECIFICATIONS, SET FORTH BY (PER DBA) REPRESENTATIVE.
13. ALL WORK SHALL BE PERFORMED BY A LICENSED ELECTRICAL CONTRACTOR IN A FIRST CLASS, WORKMANLIKE MANNER. THE COMPLETED SYSTEM SHALL BE FULLY OPERATIVE AND SUBJECT TO REGULATORY INSPECTION AND APPROVAL BY CONSTRUCTION MANAGER.
14. ALL WORK SHALL BE COORDINATED WITH OTHER TRADES TO AVOID INTERFERENCE WITH THE PROGRESS OF CONSTRUCTION.
15. CONTRACTOR SHALL GUARANTEE ANY/ALL MATERIALS AND WORK FREE FROM DEFECTS FOR A PERIOD OF NOT LESS THAN ONE YEAR FROM DATE OF ACCEPTANCE.
16. THE CORRECTION OF ANY DEFECTS SHALL BE COMPLETED WITHOUT ANY ADDITIONAL CHARGE AND SHALL INCLUDE THE REPLACEMENT OR THE REPAIR OF ANY OTHER PHASE OF THE INSTALLATION, WHICH MAY HAVE BEEN DAMAGED THEREIN.
17. ADEQUATE AND REQUIRED LIABILITY INSURANCE SHALL BE PROVIDED FOR PROTECTION AGAINST PUBLIC LOSS AND ANY/ALL PROPERTY DAMAGE FOR THE DURATION OF WORK.
18. PROVIDE AND INSTALL CONDUIT, CONDUCTORS, PULL WIRES, BOXES, COVER PLATES AND DEVICES FOR ALL OUTLETS AS INDICATED.
19. DITCHING AND BACK FILL: CONTRACTOR SHALL PROVIDE FOR ALL UNDERGROUND INSTALLED CONDUIT AND/OR CABLES INCLUDING EXCAVATION AND BACKFILLING AND COMPACTION. REFER TO NOTES AND REQUIREMENTS 'EXCAVATION, AND BACKFILLING.
20. MATERIALS, PRODUCTS AND EQUIPMENT, INCLUDING ALL COMPONENTS THEREOF, SHALL BE NEW AND SHALL APPEAR ON THE LIST OF U.L. APPROVED ITEMS AND SHALL MEET OR EXCEED THE REQUIREMENTS OF THE NEC, NEMA AND IECE.
21. CONTRACTOR SHALL SUBMIT SHOP DRAWINGS OR MANUFACTURES CATALOG INFORMATION OF ANY/ALL LIGHTING FIXTURES, SWITCHES AND ALL OTHER ELECTRICAL ITEMS FOR APPROVAL BY THE CONSTRUCTION MANAGER PRIOR TO INSTALLATION.
22. ANY CUTTING OR PATCHING DEEMED NECESSARY FOR ELECTRICAL WORK IS THE ELECTRICAL CONTRACTORS RESPONSIBILITY AND SHALL BE INCLUDED IN THE COST FOR WORK AND PERFORMED TO THE SATISFACTION OF THE 'CONSTRUCTION MANAGER' UPON FINAL ACCEPTANCE.
23. THE ELECTRICAL CONTRACTOR SHALL LABEL ALL PANELS WITH ONLY TYPEWRITTEN DIRECTORIES. ALL ELECTRICAL WIRING SHALL BE THE RESPONSIBILITY OF THE ELECTRICAL CONTRACTOR.
24. DISCONNECT SWITCHES SHALL BE H.P. RATED HEAVY-DUTY, QUICK-MAKE AND QUICK-BREAK ENCLOSURES, AS REQUIRED BY EXPOSURE TYPE.
25. ALL CONNECTIONS SHALL BE MADE WITH A PROTECTIVE COATING OF AN ANTI-OXIDE COMPOUND SUCH AS "NO-OXIDE A" BY DEARBORNE CHEMICAL CO. COAT ALL WIRE SURFACES BEFORE CONNECTING. EXPOSED COPPER SURFACES, INCLUDING GROUND BARS, SHALL BE TREATED - NO SUBSTITUTIONS.
26. RACEWAYS: CONDUIT SHALL BE SCHEDULE 40 PVC MEETING OR EXCEEDING NEMA TC2 - 1990. CONTRACTOR SHALL PLUG AND CAP EACH END OF SPARE AND EMPTY CONDUITS AND PROVIDE TWO SEPARATE PULL STRINGS - 200 LBS TEST POLYETHYLENE CORD. ALL CONDUIT BENDS SHALL BE A MINIMUM OF 2 FT. RADIUS. RGS CONDUITS WHEN SPECIFIED, SHALL MEET UL-6 FOR GALVANIZED STEEL. ALL FITTINGS SHALL BE SUITABLE FOR USE WITH THREADED RIGID CONDUIT. COAT ALL THREADS WITH 'BRITE ZINC' OR 'COLD GALV'.
27. SUPPORT OF ALL ELECTRICAL WORK SHALL BE AS REQUIRED BY NEC.
28. CONDUCTORS: CONTRACTOR SHALL USE 98% CONDUCTIVITY COPPER WITH TYPE THWN INSULATION, 600 VOLT, COLOR CODED. USE SOLID CONDUCTORS FOR WIRE UP TO AND INCLUDING NO. 8 AWG. USE STRANDED CONDUCTORS FOR WIRE ABOVE NO. 8 AWG.
29. CONNECTORS FOR POWER CONDUCTORS: CONTRACTOR SHALL USE PRESSURE TYPE INSULATED TWIST-ON CONNECTORS FOR NO. 10 AWG AND SMALLER. USE SOLDERLESS MECHANICAL TERMINAL LUGS FOR NO. 8 AWG AND LARGER.
30. SERVICE: 208v, THREE PHASE, 4 WIRE CONNECTION AVAILABLE FROM UTILITY COMPANY. OWNER OR OWNERS AGENT WILL APPLY FOR POWER.
31. TELEPHONE SERVICE: CONTRACTOR SHALL PROVIDE EMPTY CONDUITS WITH PULL STRINGS AS INDICATED ON DRAWINGS.
32. ELECTRICAL AND TELCO RACEWAYS TO BE BURIED A MINIMUM OF 2' DEPTH.
33. CONTRACTOR SHALL PLACE TWO LENGTHS OF WARNING TAPE AT A DEPTH OF 12" BELOW GROUND AND DIRECTLY ABOVE ELECTRICAL AND TELCO SERVICE CONDUITS. CAUTIONS TAPE TO READ "CAUTION BURIED ELECTRIC" OR "BURIED TELECOMM".
34. ALL BOLTS SHALL BE STAINLESS STEEL

GROUNDING NOTES

1. COMPRESSION CONNECTIONS (2), #2 AWG BARE TINNED SOLID COPPER CONDUCTORS TO GROUNDING BAR. ROUTE CONDUCTORS TO BURIED GROUNDING RING AND PROVIDE PARALLEL EXOTHERMIC WELD.
2. EC SHALL USE PERMANENT MARKER TO DRAW THE LINES BETWEEN EACH SECTION AND LABEL EACH SECTION ("P", "A", "N", "I") WITH 1" HIGH LETTERS.
3. ALL HARDWARE 3-16 STAINLESS STEEL, INCLUDING LOCK WASHERS, COAT ALL SURFACES WITH AN ANTI-OXIDANT COMPOUND BEFORE MATING. ALL HARDWARE SHALL BE STAINLESS STEEL 3/8 INCH DIAMETER OR LARGER.
4. FOR GROUND BOND TO STEEL ONLY: INSERT A CADMIUM FLAT WASHER BETWEEN LUG AND STEEL, COAT ALL SURFACES WITH AN ANTI-OXIDANT COMPOUND BEFORE MATING.
5. NUT & WASHER SHALL BE PLACED ON THE FRONT SIDE OF THE GROUNDING BAR AND BOLTED ON THE BACK SIDE.
6. NUMBER OF GROUNDING BARS MAY VARY DEPENDING ON THE TYPE OF UTILITY POLE, ANTENNA LOCATION, AND CONNECTION ORIENTATION. PROVIDE AS REQUIRED.
7. WHEN THE SCOPE OF WORK REQUIRES THE ADDITION OF A GROUNDING BAR TO AN EXISTING UTILITY POLE,THE SUBCONTRACTOR SHALL OBTAIN APPROVAL FROM THE UTILITY POLE OWNER PRIOR TO MOUNTING THE GROUNDING BAR TO THE UTILITY POLE.
8. ALL ELECTRICAL AND GROUNDING AT THE UTILITY POLE SITE SHALL COMPLY WITH THE NATIONAL ELECTRICAL CODE (NEC), NATIONAL FIRE PROTECTION ASSOCIATION (NFPA) 780 (LATEST EDITION), AND MANUFACTURER.

ADDITIONAL NOTES:

9. ALL DETAILS ARE SHOWN IN GENERAL TERMS. ACTUAL GROUNDING INSTALLATION AND CONSTRUCTION MAY VARY DUE TO SITE SPECIFIC CONDITIONS.
10. GROUND ALL ANTENNA BASES, FRAMES, CABLE RUNS, AND OTHER METALLIC COMPONENTS USING #2 GROUND WIRES AND CONNECT TO SURFACE MOUNTED GROUND BUS BARS AS SHOWN. FOLLOW ANTENNA AND BTS MANUFACTURER'S PRACTICES FOR GROUNDING REQUIREMENTS. GROUND COAX SHIELD AT BOTH ENDS USING MANUFACTURERS PRACTICES ALL UNDERGROUND WATER PIPES, METAL CONDUITS AND GROUNDS THAT ARE A PART OF THIS SYSTEM SHALL BE BONDED TOGETHER.
11. ALL GROUND CONNECTIONS SHALL BE #2 AWG U.N.O. ALL WIRES SHALL BE COPPER WITH THHN/THWN. ALL GROUND WIRE SHALL BE SOLID TIN COATED OR STRANDED GREEN INSULATED WIRE.
12. CONTRACTOR TO VERIFY AND TEST GROUND TO SOURCE, 10 OHMS MAXIMUM. PROVIDE SUPPLEMENT GROUNDING RODS AS REQUIRED TO ACHIEVE SPECIFIED OHMS READING. GROUNDING AND OTHER OPTIONAL TESTING WILL BE WITNESSED BY THE (PER DBA) REPRESENTATIVE.
13. NOTIFY ARCHITECT/ENGINEER IF THERE ARE ANY DIFFICULTIES INSTALLING GROUNDING SYSTEM DUE TO SITE SOIL CONDITIONS.
14. ALL HORIZONTALLY RUN GROUNDING CONDUCTORS SHALL BE INSTALLED MINIMUM 12" BELOW GRADE/FROST-LINE IN TRENCH, U.N.O., AND BACK FILL SHALL BE COMPACTED AS REQUIRED BY ARCHITECT.
15. ALL GROUND CONDUCTORS SHALL BE RUN AS STRAIGHT AND SHORT AS POSSIBLE, WITH A MINIMUM 12" BENDING RADIUS NOT LESS THAN 90 DEGREES.
16. ALL SUPPORT STRUCTURES, CABLE CHANNEL WAYS OR WIRE GUIDES SHALL BE BONDED TO GROUND SYSTEM AT A POINT NEAREST THE MAIN GROUNDING BUS "MGB" (OR DIRECTLY TO GROUND-RING).
17. ACCEPTABLE CONNECTIONS FOR GROUNDING SYSTEM SHALL BE:
   a. BURNDY, HY-GRADE U.L. LISTED CONNECTORS FOR OUTDOOR USE OR AS APPROVED BY (PER DBA) PROJECT MANAGER.
   b. CADWELD, EXOTHERMIC WELDS (WELDED CONNECTIONS).
   c. TWO -(2) HOLE TINNED COPPER COMPRESSION (LONG BARREL) FITTINGS (BUS BAR CONNECTIONS).
18. ALL CRIMPED CONNECTIONS SHALL HAVE EMBOSSED MANUFACTURER'S DIEMARK VISIBLE AT THE CRIMP AND WEATHERPROOFED WITH HEAT SHRINK TUBING (RESULTING FROM USE OF PROPER CRIMPING DEVICES).
19. PRIOR TO ANY LUG-BUSSBAR CONNECTIONS, THE BUSSBAR SHALL BE CLEANED BY USE OF "SCOTCH-BRITE' OR PLAIN STEEL WOOL AS TO REMOVE ALL SURFACE OXIDATION AND CONTAMINANTS. A COATING OF "NO-OX-ID" SHALL BE APPLIED TO THE CONNECTION SURFACES.
20. ALL CONNECTION HARDWARE SHALL BE TYPE 3-16 STAINLESS STEEL (NOT ATTRACTED TO MAGNETS).
21. THE GROUND RING SHALL BE INSTALLED 24" MINIMUM BEYOND ANY BUILDING DRIP LINE.
22. ELECTRICAL SERVICE EQUIPMENT GROUNDING SHALL COMPLY WITH NEC, ARTICLE 250-82 AND SHALL BOND ALL EXISTING AND NEW GROUNDING ELECTRODES. NEW GROUNDING ELECTRODE SHALL INCLUDE BUT NOT LIMITED TO GROUND RODS, GROUND RING IF SERVICE IS WITHIN THE RADIO EQUIPMENT LOCATION, BUILDING STEEL IF APPLICABLE, COLD WATER CONNECTIONS MUST BE MADE ON THE STREET SIDE OF MAIN SHUT-OFF VALVE.

mobilitie
intelligent infrastructure

MOBILITIE, LLC

DRAWN BY:	CAM
DATE:	06/14/16

REV	DATE	DESCRIPTION	BY
0	06/14/16	90% ISSUED FOR REVIEW	CAM
B	07/17/16	90% ISSUED FOR REVIEW	ANW

IT IS A VIOLATION OF LAW FOR ANY PERSON, UNLESS THEY ARE ACTING UNDER THE DIRECTION OF A LICENSED PROFESSIONAL ENGINEER, TO ALTER THIS DOCUMENT.

SITE ID:
9WAX000687A

1010 SLEATER KINNEY RD. SE,
LACEY, WA 98503
SLEATER KINNEY RD. SE & PACIFIC AVE. SE
UTILITY POLE

SHEET TITLE

GENERAL NOTES

SHEET NUMBER

T-2

SITE WORK NOTES

1. DO NOT EXCAVATE OR DISTURB BEYOND THE PROPERTY LINES OR LEASE LINES, UNLESS OTHERWISE NOTED.
2. DO NOT SCALE BUILDING DIMENSIONS FROM DRAWING.
3. SIZE, LOCATION AND TYPE OF ANY UNDERGROUND UTILITIES OR IMPROVEMENTS SHALL BE ACCURATELY NOTED AND PLACED ON AS-BUILT DRAWINGS BY GENERAL CONTRACTOR AND ISSUED TO ARCHITECT/ENGINEER AT COMPLETION OF PROJECT.
4. ALL EXISTING UTILITIES, FACILITIES, CONDITIONS AND THEIR DIMENSIONS SHOWN ON PLANS HAVE. BEEN PLOTTED FROM AVAILABLE RECORDS. THE ENGINEER AND OWNER ASSUME NO RESPONSIBILITY WHATSOEVER AS TO THE SUFFICIENCY OR ACCURACY OF THE INFORMATION SHOWN ON THE PLANS OR THE MANNER OF THEIR REMOVAL OR ADJUSTMENT. CONTRACTOR SHALL BE RESPONSIBLE FOR DETERMINING EXACT LOCATION OF ALL EXISTING UTILITIES AND FACILITIES PRIOR TO START OF CONSTRUCTION. CONTRACTOR SHALL ALSO OBTAIN FROM EACH UTILITY COMPANY DETAILED INFORMATION RELATIVE TO WORKING SCHEDULES AND METHODS OF REMOVING OR ADJUSTING EXISTING UTILITIES.
5. CONTRACTOR SHALL VERIFY ALL EXISTING UTILITIES BOTH HORIZONTALLY AND VERTICALLY PRIOR TO START OF CONSTRUCTION. ANY DISCREPANCIES OR DOUBTS AS TO THE INTERPRETATION OF PLANS SHALL BE IMMEDIATELY REPORTED TO THE ARCHITECT/ENGINEER FOR RESOLUTION AND INSTRUCTION, AND NO FURTHER WORK SHALL BE PERFORMED UNTIL THE DISCREPANCY IS CHECKED AND CORRECTED BY THE ARCHITECT/ENGINEER. FAILURE TO SECURE SUCH INSTRUCTION MEANS CONTRACTOR WILL HAVE WORKED AT HIS/HER OWN RISK AND EXPENSE. CONTRACTOR SHALL CALL LOCAL DIGGER HOT LINE FOR UTILITY LOCATIONS 48 HOURS PRIOR TO START OF CONSTRUCTION.
6. ALL NEW AND EXISTING UTILITY STRUCTURES ON SITE AND IN AREAS TO BE DISTURBED BY CONSTRUCTION SHALL BE ADJUSTED TO FINISH ELEVATIONS PRIOR TO FINAL INSPECTION OF WORK.
7. GRADING OF THE SITE WORK AREA IS TO BE SMOOTH AND CONTINUOUS IN SLOPE AND IS TO FEATHER INTO EXISTING GRADES AT THE GRADING LIMITS.
8. ALL TEMPORARY EXCAVATIONS FOR THE INSTALLATION OF FOUNDATIONS, UTILITIES, ETC., SHALL BE PROPERLY LAID BACK OR BRACED IN ACCORDANCE WITH CORRECT OCCUPATIONAL SAFETY AND HEALTH ADMINISTRATION (OSHA) REQUIREMENTS.
9. STRUCTURAL FILLS SUPPORTING PAVEMENTS SHALL BE COMPACTED TO 95% OF MAXIMUM STANDARD PROCTOR DRY DENSITY.
10. NEW GRADES NOT IN BUILDING AND DRIVEWAY IMPROVEMENT AREA TO BE ACHIEVED BY FILLING WITH APPROVED CLEAN FILL AND COMPACTED TO 95% OF STANDARD PROCTOR DENSITY.
11. ALL FILL SHALL BE PLACED IN UNIFORM LIFTS. THE LIFTS THICKNESS SHOULD NOT EXCEED THAT WHICH CAN BE PROPERLY COMPACTED THROUGHOUT ITS ENTIRE DEPTH WITH THE EQUIPMENT AVAILABLE.
12. ANY FILLS PLACED ON EXISTING SLOPES THAT ARE STEEPER THAN 10 HORIZONTAL TO 1 VERTICAL SHALL BE PROPERLY BENCHED INTO THE EXISTING SLOPE AS DIRECTED BY A GEOTECHNICAL ENGINEER.
13. CONTRACTOR SHALL CLEAN ENTIRE SITE AFTER CONSTRUCTION SUCH THAT NO PAPERS, TRASH, WEEDS, BRUSH OR ANY OTHER DEPOSITS WILL REMAIN. ALL MATERIALS COLLECTED DURING CLEANING OPERATIONS SHALL BE DISPOSED OF OFF-SITE BY THE GENERAL CONTRACTOR.
14. ALL TREES AND SHRUBS WHICH ARE NOT IN DIRECT CONFLICT WITH THE IMPROVEMENTS SHALL BE PROTECTED BY THE GENERAL CONTRACTOR.
15. ALL SITE WORK SHALL BE CAREFULLY COORDINATED BY GENERAL CONTRACTOR WITH LOCAL UTILITY COMPANY, TELEPHONE COMPANY, AND ANY OTHER UTILITY COMPANIES HAVING JURISDICTION OVER THIS LOCATION.

ENVIRONMENTAL NOTES

1. ALL WORK PERFORMED SHALL BE DONE IN ACCORDANCE WITH ISSUED PERMITS. THE CONTRACTOR SHALL BE RESPONSIBLE FOR PAYMENT OF FINES AND PROPER CLEAN UP FOR AREAS IN VIOLATION.
2. CONTRACTOR AND/OR DEVELOPER SHALL BE RESPONSIBLE FOR CONSTRUCTION AND MAINTENANCE OF EROSION AND SEDIMENTATION CONTROLS DURING CONSTRUCTION FOR PROTECTION OF ADJACENT PROPERTIES, ROADWAYS AND WATERWAYS AND SHALL BE MAINTAINED IN PLACE THROUGH FINAL JURISDICTIONAL INSPECTION & RELEASE OF SITE.
3. CONTRACTOR SHALL INSTALL/CONSTRUCT ALL NECESSARY SEDIMENT/SILT CONTROL FENCING AND PROTECTIVE MEASURES WITHIN THE LIMITS OF SITE DISTURBANCE PRIOR TO CONSTRUCTION.
4. NO SEDIMENT SHALL BE ALLOWED TO EXIT THE PROPERTY. THE CONTRACTOR IS RESPONSIBLE FOR TAKING ADEQUATE MEASURES FOR CONTROLLING EROSION. ADDITIONAL SEDIMENT CONTROL FENCING MAY BE REQUIRED IN ANY AREAS SUBJECT TO EROSION.
5. THE CONTRACTOR IS RESPONSIBLE FOR MAINTAINING POSITIVE DRAINAGE ON THE SITE AT ALL TIMES WITH SILT AND EROSION CONTROL MEASURES MAINTAINED ON THE DOWNSTREAM SIDE OF SITE DRAINAGE. ANY DAMAGE TO ADJACENT PROPERTY AS A RESULT OF EROSION WILL BE CORRECTED AT THE CONTRACTORS EXPENSE.
6. CONTRACTOR SHALL BE RESPONSIBLE FOR DAILY INSPECTIONS AND ANY REPAIRS OF ALL SEDIMENT CONTROL MEASURES INCLUDING SEDIMENT REMOVAL AS NECESSARY.
7. CLEARING OF VEGETATION AND TREE REMOVAL SHALL BE ONLY AS PERMITTED AND BE HELD TO A MINIMUM. ONLY TREES NECESSARY FOR CONSTRUCTION OF THE FACILITIES SHALL BE REMOVED.
8. SEEDING AND MULCHING AND/OR SODDING OF THE SITE WILL BE ACCOMPLISHED AS SOON AS POSSIBLE AFTER COMPLETION OF THE PROJECT FACILITIES AFFECTING LAND DISTURBANCE.
9. CONTRACTOR SHALL PROVIDE ALL EROSION AND SEDIMENTATION CONTROL MEASURES AS REQUIRED BY LOCAL, COUNTY AND STATE CODES AND ORDINANCES TO PROTECT EMBANKMENTS FROM SOIL LOSS AND TO PREVENT ACCUMULATION OF SOIL AND SILT IN STREAMS AND DRAINAGE PATHS LEAVING THE CONSTRUCTION AREA. THIS MAY INCLUDE SUCH MEASURES AS SILT FENCES, STRAW BALE SEDIMENT BARRIERS, AND CHECK DAMS.
10. RIP RAP OF SIZES INDICATED SHALL CONSIST OF CLEAN, HARD, SOUND, DURABLE, UNIFORM IN QUALITY STONE FREE OF ANY DETRIMENTAL QUANTITY OF SOFT, FRIABLE, THIN, ELONGATED OR LAMINATED PIECES, DISINTEGRATED MATERIAL, ORGANIC MATTER, OIL, ALKALI, OR OTHER DELETERIOUS SUBSTANCES

FOUNDATION, EXCAVATION AND BACKFILL NOTES

1. ALL FINAL GRADED SLOPES SHALL BE A MAXIMUM OF 3 HORIZONTAL TO 1 VERTICAL.
2. ALL EXCAVATIONS PREPARED FOR PLACEMENT OF CONCRETE SHALL BE OF UNDISTURBED SOILS, SUBSTANTIALLY HORIZONTAL AND FREE FROM ANY LOOSE, UNSUITABLE MATERIAL OR FROZEN SOILS, AND WITHOUT THE PRESENCE OF POUNDING WATER. DEWATERING FOR EXCESS GROUND WATER SHALL BE PROVIDED WHEN REQUIRED. COMPACTION OF SOILS UNDER CONCRETE PAD FOUNDATIONS SHALL NOT BE LESS THAN 95% OF THE MODIFIED PROCTOR MAXIMUM DRY DENSITY FOR THE SOIL IN ACCORDANCE WITH ASTM D1557.
3. CONCRETE FOUNDATIONS SHALL NOT BE PLACED ON ORGANIC OR UNSUITABLE MATERIAL. IF INADEQUATE BEARING CAPACITY IS REACHED AT THE DESIGNED EXCAVATION DEPTH, THE UNSATISFACTORY SOIL SHALL BE EXCAVATED TO ITS FULL DEPTH AND EITHER BE REPLACED WITH MECHANICALLY COMPACTED GRANULAR MATERIAL OR THE EXCAVATION SHALL BE FILLED WITH CONCRETE OF THE SAME TYPE SPECIFIED FOR THE FOUNDATION. CRUSHED STONE MAY BE USED TO STABILIZE THE BOTTOM OF THE EXCAVATION. ANY STONE SUB BASE MATERIAL, IF USED, SHALL NOT SUBSTITUTE FOR REQUIRED THICKNESS OF CONCRETE.
4. ALL EXCAVATIONS SHALL BE CLEAN OF UNSUITABLE MATERIAL SUCH AS VEGETATION, TRASH, DEBRIS, AND SO FORTH PRIOR TO BACK FILLING. BACK FILL SHALL CONSIST OF APPROVED MATERIALS SUCH AS EARTH, LOAM, SANDY CLAY, SAND AND GRAVEL, OR SOFT SHALE, FREE FROM CLODS OR LARGE STONES OVER 2 1/2" MAX DIMENSIONS. ALL BACK FILL SHALL BE PLACED IN COMPACTED LAYERS.
5. ALL FILL MATERIALS AND FOUNDATION BACK FILL SHALL BE PLACED IN MAXIMUM 6"THICK LIFTS BEFORE COMPACTION. EACH LIFT SHALL BE WETTED IF REQUIRED AND COMPACTED TO NOT LESS THAN 95% OF THE MODIFIED PROCTOR MAXIMUM DRY DENSITY FOR SOIL IN ACCORDANCE WITH ASTM D1557.
6. NEWLY PLACED CONCRETE FOUNDATIONS SHALL CURE A MINIMUM OF 72 HRS PRIOR TO BACK FILLING.
7. FINISHED GRADING SHALL BE SLOPED TO PROVIDE POSITIVE DRAINAGE AND PREVENT STANDING WATER. THE FINAL (FINISH) ELEVATION OF SLAB FOUNDATIONS SHALL SLOPE AWAY IN ALL DIRECTIONS FROM THE CENTER. FINISH GRADE OF CONCRETE PADS SHALL BE A MAXIMUM OF 4 INCHES ABOVE FINAL FINISH GRADE ELEVATIONS. PROVIDE SURFACE FILL GRAVEL TO ESTABLISH SPECIFIED ELEVATIONS WHERE REQUIRED.
8. NEWLY GRADED SURFACE AREAS TO RECEIVE GRAVEL SHALL BE COVERED WITH GEOTEXTILE FABRIC TYPE: TYPAR-3401 AS MANUFACTURED BY "CONSTRUCTION MATERIAL 1-800-239-3841" OR AN APPROVED EQUIVALENT, SHOWN ON PLANS. THE GEOTEXTILE FABRIC SHALL BE BLACK IN COLOR TO CONTROL THE RECURRENCE OF VEGETATIVE GROWTH AND EXTEND TO WITHIN 1 FOOT OUTSIDE THE SITE FENCING OR ELECTRICAL GROUNDING SYSTEM PERIMETER WHICH EVER IS GREATER. ALL FABRIC SHALL BE COVERED WITH A MINIMUM OF 4" DEEP COMPACTED STONE OR GRAVEL AS SPECIFIED. I.E. FDOT TYPE No. 57 FOR FENCED COMPOUND; FDOT TYPE No. 67 FOR ACCESS DRIVE AREA.
9. IN ALL AREAS TO RECEIVE FILL, REMOVE ALL VEGETATION, TOPSOIL, DEBRIS, WET AND UNSATISFACTORY SOIL MATERIALS, OBSTRUCTIONS, AND DELETERIOUS MATERIALS FROM GROUND SURFACE. PLOW STRIP OR BREAK UP SLOPED SURFACES STEEPER THAN 1 VERTICAL TO 4 HORIZONTAL SUCH THAT FILL MATERIAL WILL BIND WITH EXISTING/PREPARED SOIL SURFACE.
10. WHEN SUB GRADE OR PREPARED GROUND SURFACE HAS A DENSITY LESS THAN THAT REQUIRED FOR THE FILL MATERIAL, SCARIFY THE GROUND SURFACE TO DEPTH REQUIRED, PULVERIZE, MOISTURE-CONDITION AND/OR AERATE THE SOILS AND RECOMPACT TO THE REQUIRED DENSITY PRIOR TO PLACEMENT OF FILLS.
11. IN AREAS WHICH EXISTING GRAVEL SURFACING IS REMOVED OR DISTURBED DURING CONSTRUCTION OPERATIONS, REPLACE GRAVEL SURFACING TO MATCH ADJACENT GRAVEL SURFACING AND RESTORED TO THE SAME THICKNESS AND COMPACTION AS SPECIFIED. ALL RESTORED GRAVEL SURFACING SHALL BE FREE FROM CORRUGATIONS AND WAVES.
12. EXISTING GRAVEL SURFACING MAY BE EXCAVATED SEPARATELY AND REUSED WITH THE CONDITION THAT ANY UNFAVORABLE AMOUNTS OF ORGANIC MATTER, OR OTHER DELETERIOUS MATERIALS ARE REMOVED PRIOR TO REUSE. FURNISH ANY ADDITIONAL GRAVEL RESURFACING MATERIAL AS NEEDED TO PROVIDE A FULL DEPTH COMPACTED SURFACE THROUGHOUT SITE.
13. GRAVEL SUB SURFACE SHALL BE PREPARED TO REQUIRED COMPACTION AND SUB GRADE ELEVATIONS BEFORE GRAVEL SURFACING IS PLACED AND/OR RESTORED. ANY LOOSE OR DISTURBED MATERIALS SHALL BE THOROUGHLY COMPACTED AND ANY DEPRESSIONS IN THE SUB GRADE SHALL BE FILLED AND COMPACTED WITH APPROVED SELECTED MATERIAL. GRAVEL SURFACING MATERIAL SHALL NOT BE USED FOR FILLING DEPRESSIONS IN THE SUB GRADE.
14. PROTECT EXISTING GRAVEL SURFACING AND SUB GRADE IN AREAS WHERE EQUIPMENT LOADS WILL OPERATE. USE PLANKING 'MATTS' OR OTHER SUITABLE PROTECTION DESIGNED TO SPREAD EQUIPMENT LOADS AS MAY BE NECESSARY. REPAIR ANY DAMAGE TO EXISTING GRAVEL SURFACING OR SUB GRADE WHERE SUCH DAMAGE IS DUE TO THE CONTRACTORS OPERATIONS.
15. DAMAGE TO EXISTING STRUCTURES AND/OR UTILITIES RESULTING FROM CONTRACTORS NEGLIGENCE SHALL BE REPAIRED AND/ OR REPLACED TO THE OWNERS SATISFACTION AT NO ADDITIONAL COST TO THE CONTRACT.
16. ALL SUITABLE BORROW MATERIAL FOR BACK FILL OF THE SITE SHALL BE INCLUDED IN THE BID. EXCESS TOPSOIL AND UNSUITABLE MATERIAL SHALL BE DISPOSED OF OFF SITE AT LOCATIONS APPROVED BY GOVERNING AGENCIES AT NO ADDITIONAL COST TO THE CONTRACT.

mobilitie
intelligent infrastructure

MOBILITIE, LLC

DRAWN BY:	CAM
DATE:	06/14/16

REV	DATE	DESCRIPTION	BY
0	06/14/16	90% ISSUED FOR REVIEW	CAM
B	07/17/16	90% ISSUED FOR REVIEW	ANW

IT IS A VIOLATION OF LAW FOR ANY PERSON, UNLESS THEY ARE ACTING UNDER THE DIRECTION OF A LICENSED PROFESSIONAL ENGINEER, TO ALTER THIS DOCUMENT.

SITE ID:
9WAX000687A

1010 SLEATER KINNEY RD. SE,
LACEY, WA 98503
SLEATER KINNEY RD. SE & PACIFIC AVE. SE
UTILITY POLE

SHEET TITLE

GENERAL NOTES

SHEET NUMBER

T-3

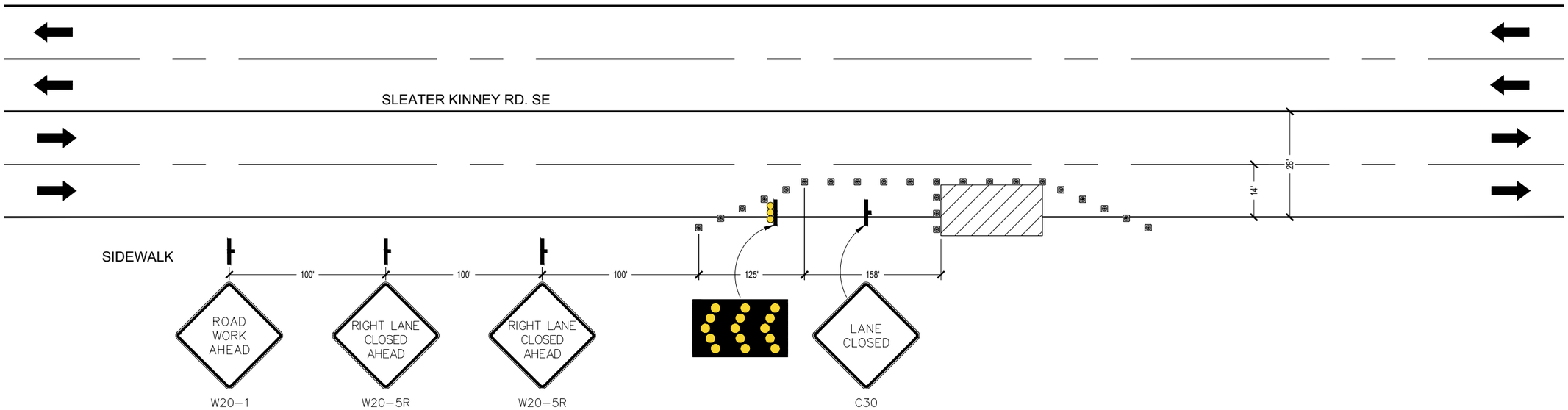

DISTANCE BETWEEN SIGNS

Speed (MPH)	Spacing (ft.)			
	A	B	C	D
40 or less	200	200	200	100
41 to 49	350	350	350	175
50 to 54	500	500	500	250
55 or greater	2640	1640	1000	500

* "ROAD WORK 1 MILE" sign may be used as an alternate to the "ROAD WORK AHEAD" sign

** 500' beyond the "ROAD WORK AHEAD" sign or midway between signs, whichever is less

*** "BE PREPARED TO STOP" sign may be omitted for speeds of 45 MPH or less

TABLE 1 DEVICE SPACING

Speed (MPH)	Max Distance Between Devices (ft.)			
	Cones or Delineators		Type I or Type II Barricades or Vertical Panels or Drums	
	Taper	Tangent	Taper	Tangent
25 to 49	20	50	20	50
50 or greater	20	50	20	100

BUFFER SPACE

Speed (MPH)	Distance (ft.)
25	155
30	200
35	250
40	305
45	360
50	425
55	495
60	570
65	645
70	730

When Buffer Space cannot be attained due to geometric constraints, the greatest attainable length shall be used, but not less than 200 ft.

GENERAL NOTES

1. Work operations shall be confined to one traffic lane, leaving the opposite lane open to traffic.
2. Additional one-way control may be effected by the following means:
   - Flag-carrying vehicle
   - Official vehicle
   - Pilot vehicle
   - Traffic signal
3. The "ONE LANE ROAD" signs are to be fully covered and the "FLAGGER" signs either removed or fully covered when no work is being performed and the roadway is open to two-way traffic
4. When a side road intersects the roadway within the TTC zone, additional TTC devices shall be placed in accordance with applicable TCZ Indexes.
5. The two channelizing devices directly in front of the work area and the one channelzing device directly at the end of the work area may be omitted provided vehicles in the work area have high-intensity rotating, flashing, oscillating, or strobe lights operating.
6. For general TCZ requirements and additional information, refer to MUTCD.

DURATION NOTES

1. "ROAD WORK AHEAD" and the "BE PREPARED TO STOP" signs may be omitted if all of the following conditions are met:

a. Work operations are 60 minutes or less
b. Speed limit is 45 MPH or less
c. No sight obstructions to vehicles approaching the work area for a distance equal to the buffer space
d. Vehicles in the work area have high-intensity, rotating, flashing, oscillating, or strobe lights operating
e. Volume and complexity of the roadway has been considered

CONDITIONS

WHERE ANY VEHICLE, EQUIPMENT, WORKERS OR THEIR ACTIVITIES ENCROACH THE AREA BETWEEN THE CENTERLINE AND A LINE 2' OUTSIDE THE EDGE OF TRAVEL WAY

LEGEND

- CHANNELIZING DEVICE
- SIGN
- WORK SPACE
- FLAGGER
- DIRECTION OF TRAFFIC

mobilitie
intelligent infrastructure

MOBILITIE, LLC

DRAWN BY:	CAM
DATE:	06/14/16

REV	DATE	DESCRIPTION	BY
0	06/14/16	90% ISSUED FOR REVIEW	CAM
B	07/17/16	90% ISSUED FOR REVIEW	ANW

IT IS A VIOLATION OF LAW FOR ANY PERSON, UNLESS THEY ARE ACTING UNDER THE DIRECTION OF A LICENSED PROFESSIONAL ENGINEER, TO ALTER THIS DOCUMENT.

SITE ID:
9WAX000687A
1010 SLEATER KINNEY RD. SE,
LACEY, WA 98503
SLEATER KINNEY RD. SE & PACIFIC AVE. SE
UTILITY POLE

SHEET TITLE
TRAFFIC CONTROL PLAN

SHEET NUMBER
TC-1

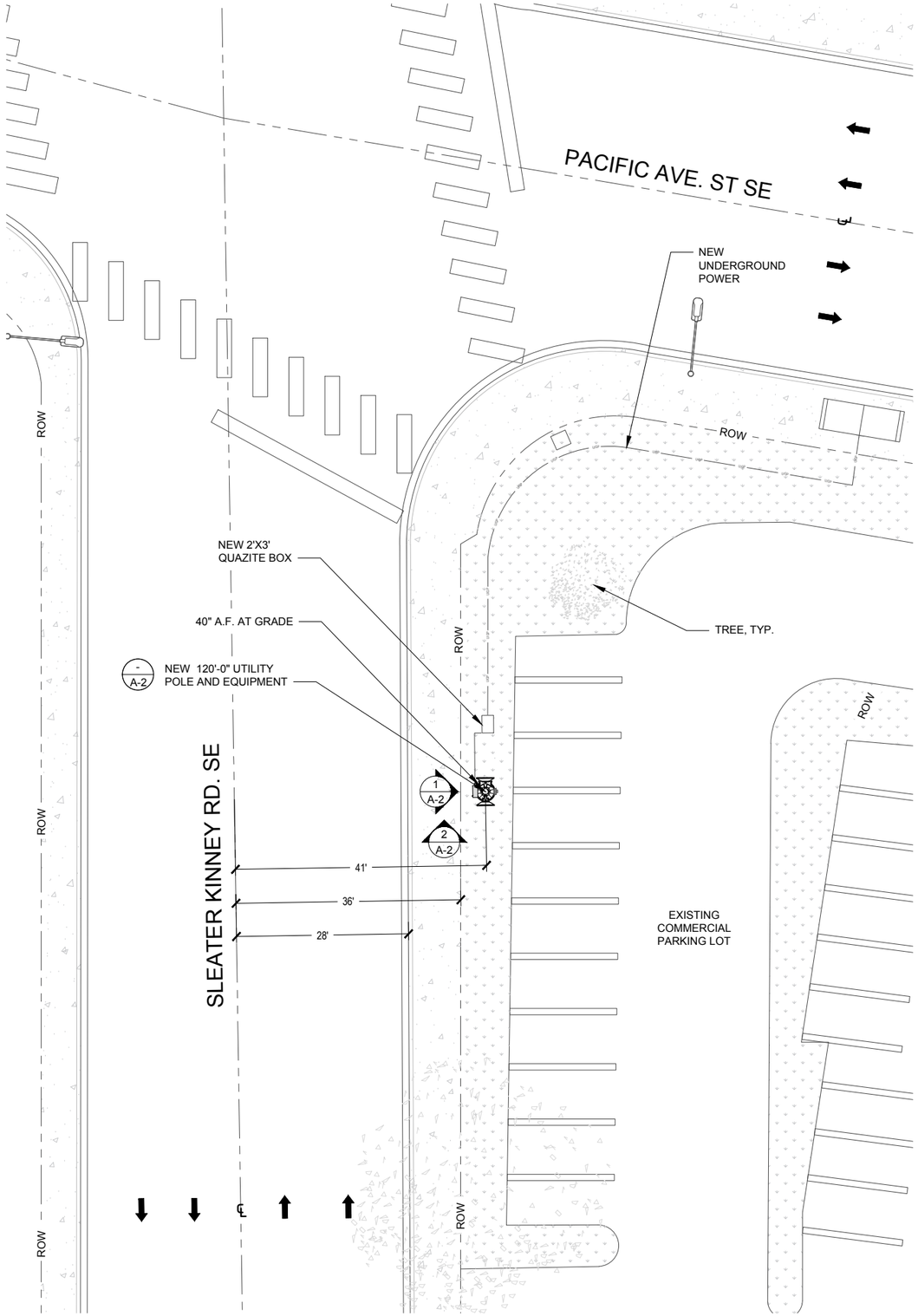

ENLARGED SITE PLAN

24"x36" SCALE: 3/32" = 1'-0"
11"x17" SCALE: 3/64" = 1'-0"

8' 4' 0" 8'

2

NOTE:
THIS SITE PLAN WAS GENERATED WITHOUT THE USE OF A SURVEY. PROPERTY LINES, POWER & TELCO UTILITY PINT CONNECTIONS/ROUTES AND EASEMENTS SHOWN ON THESE PLANS ARE ESTIMATED.

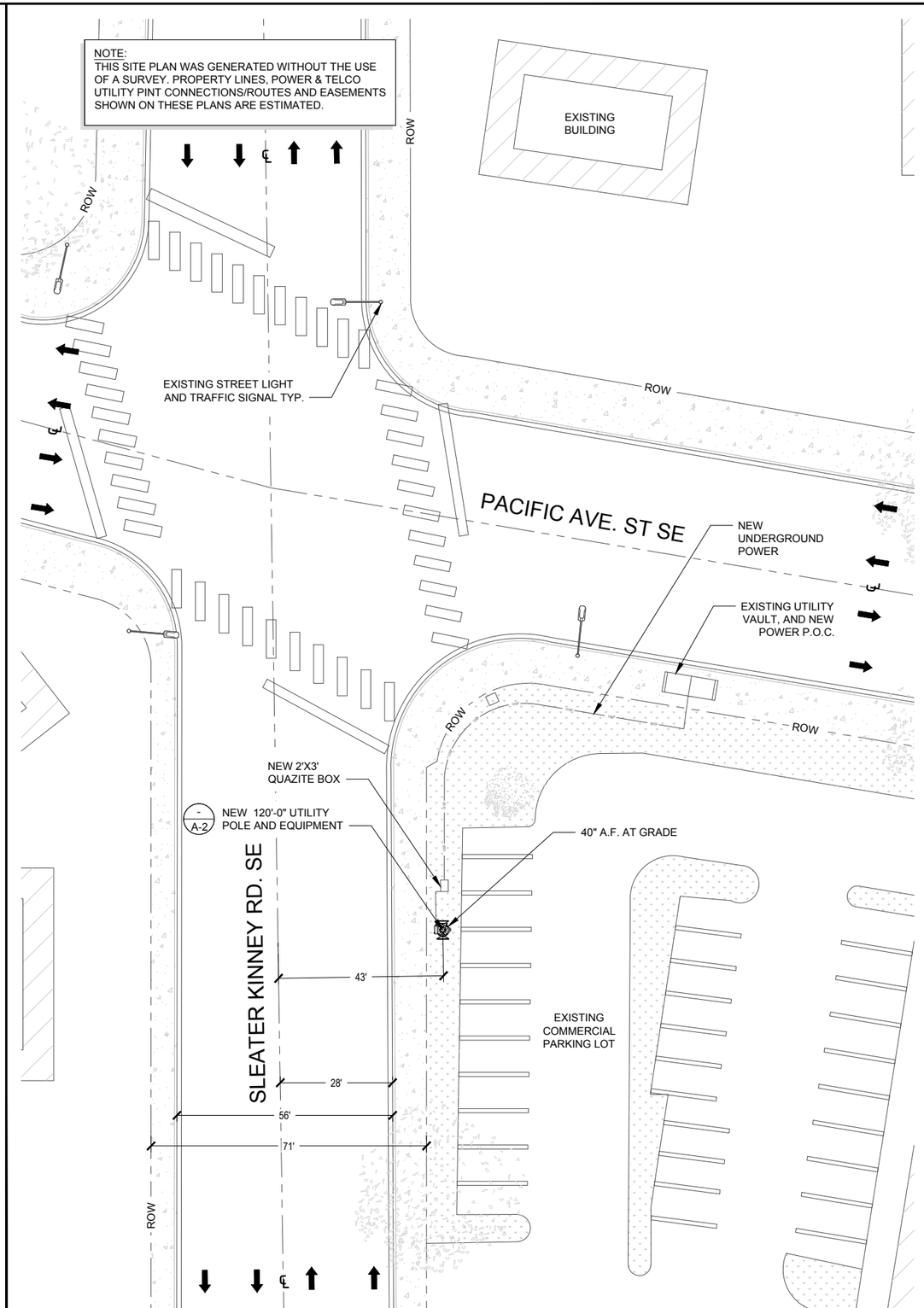

SITE PLAN

24"x36" SCALE: 1/16" = 1'-0"
11"x17" SCALE: 1/32" = 1'-0"

16' 12' 8' 4' 0" 16'

1

mobilitie
intelligent infrastructure

MOBILITIE, LLC

DRAWN BY:	CAM
DATE:	06/14/16

REV	DATE	DESCRIPTION	BY
0	06/14/16	90% ISSUED FOR REVIEW	CAM
B	07/17/16	90% ISSUED FOR REVIEW	ANW

IT IS A VIOLATION OF LAW FOR ANY PERSON, UNLESS THEY ARE ACTING UNDER THE DIRECTION OF A LICENSED PROFESSIONAL ENGINEER, TO ALTER THIS DOCUMENT.

SITE ID:
9WAX000687A

1010 SLEATER KINNEY RD. SE,
LACEY, WA 98503
SLEATER KINNEY RD. SE & PACIFIC AVE. SE
UTILITY POLE

SHEET TITLE

SITE PLANS

SHEET NUMBER

A-1

BILL OF MATERIALS CHART				
#	DESCRIPTION	CABLE LN.	DIMENSIONS (HxWxD)	WEIGHT
-	-	-	-	-
-	-	-	-	-
-	-	-	-	-
-	-	-	-	-
-	-	-	-	-
-	-	-	-	-
-	-	-	-	-
-	-	-	-	-
-	-	-	-	-
-	-	-	-	-
-	-	-	-	-
-	-	-	-	-
-	-	-	-	-
-	-	-	-	-
-	-	-	-	-
-	-	-	-	-

MAKE READY NOTES:

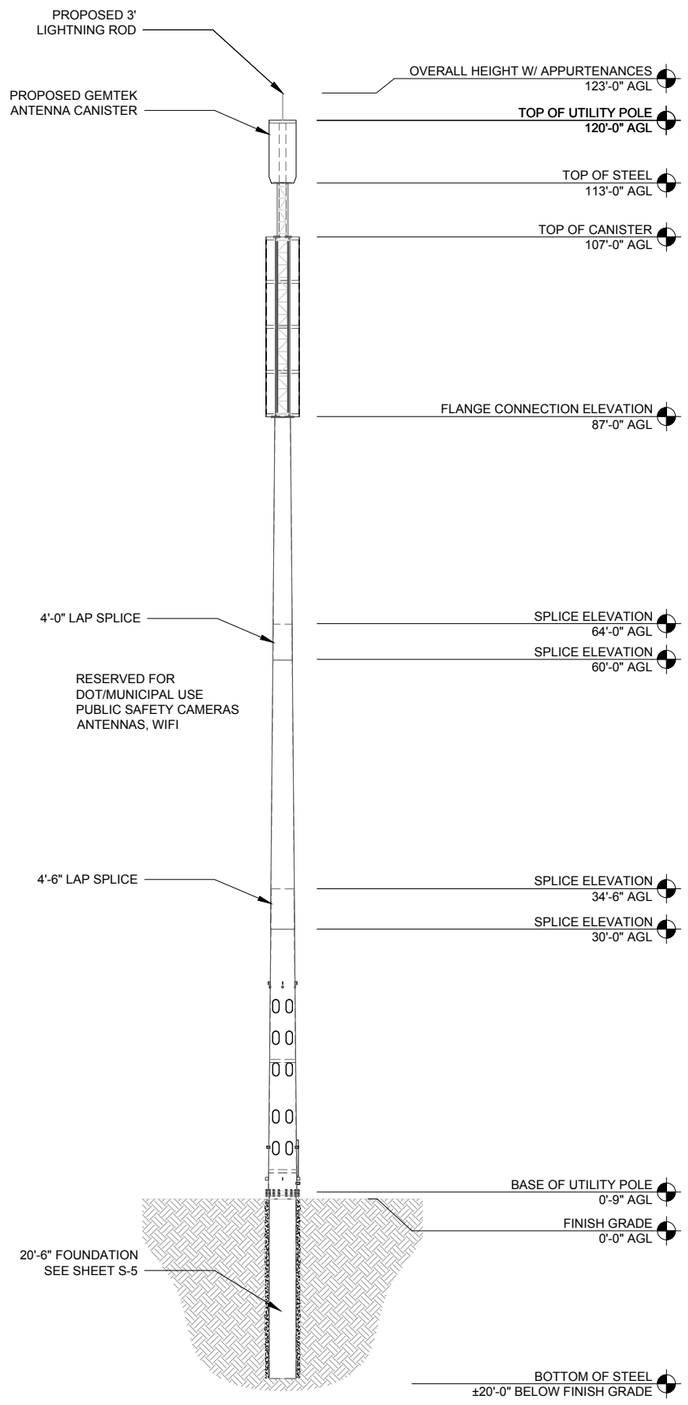

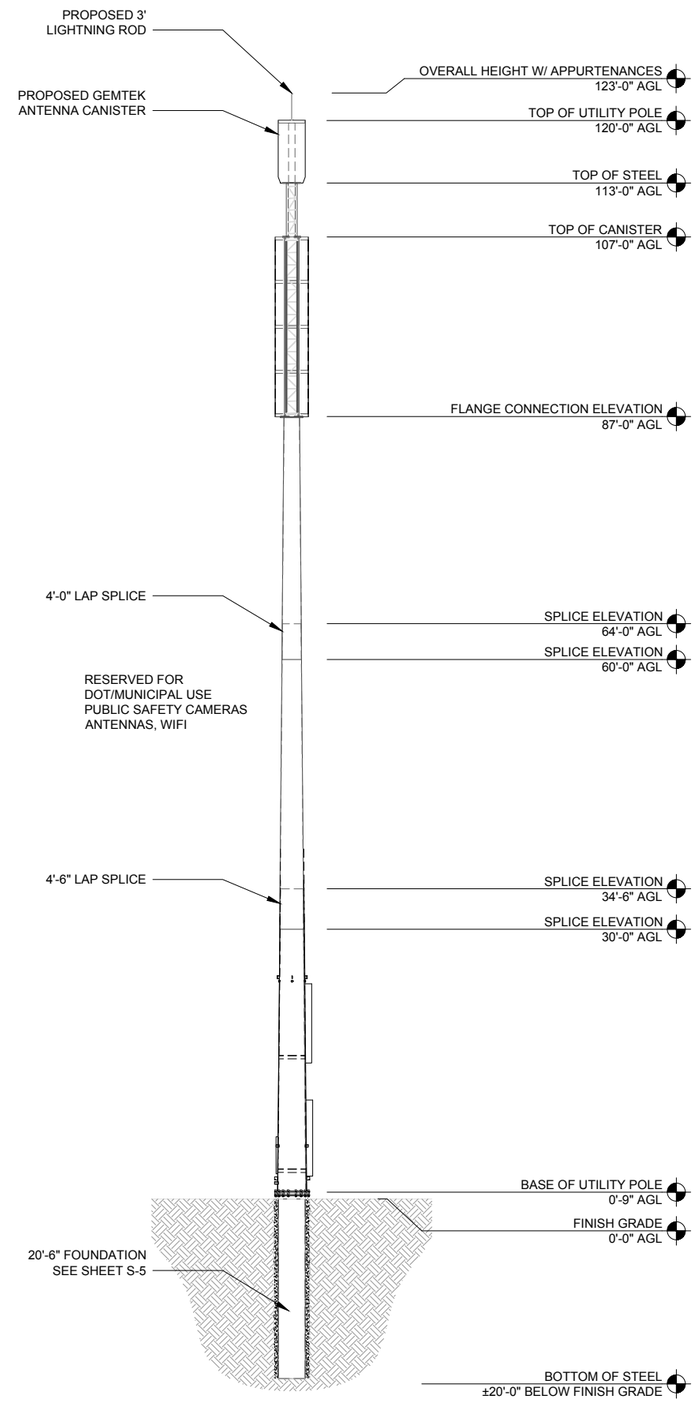

mobilitie
intelligent infrastructure

MOBILITIE, LLC

DRAWN BY:	CAM
DATE:	06/14/16

REV	DATE	DESCRIPTION	BY
0	06/14/16	90% ISSUED FOR REVIEW	CAM
B	07/17/16	90% ISSUED FOR REVIEW	ANW

IT IS A VIOLATION OF LAW FOR ANY PERSON, UNLESS THEY ARE ACTING UNDER THE DIRECTION OF A LICENSED PROFESSIONAL ENGINEER, TO ALTER THIS DOCUMENT.

SITE ID:
9WAX000687A

1010 SLEATER KINNEY RD. SE,
LACEY, WA 98503
SLEATER KINNEY RD. SE & PACIFIC AVE. SE
UTILITY POLE

SHEET TITLE
NORTH AND EAST ELEVATIONS

SHEET NUMBER
A-2

MAKE READY NOTES | 24"x36" SCALE: NTS | 11"x17" SCALE: NTS | 3

NEW SOUTH ELEVATION | 24"x36" SCALE: 1/8" = 1'-0" | 11"x17" SCALE: 1/16" = 1'-0" | 8' 6' 4' 2' 0' 8' | 2

NEW EAST ELEVATION | 24"x36" SCALE: 1/8" = 1'-0" | 11"x17" SCALE: 1/16" = 1'-0" | 8' 6' 4' 2' 0' 8' | 1

NOT USED | SCALE N.T.S. | 10

NOT USED | SCALE N.T.S. | 7

NOT USED | SCALE N.T.S. | 4

OWNER / OPERATOR NOTE:
SITE ID LABEL TO BE AFFIXED WITH TZeS241 LABELING TAPE OR EQUIVALENT BLACK ON WHITE LABELING TAPE OF AT LEAST 18mm WIDTH WITH EXTRA-STRENGTH ADHESIVE. USE ANY COMPATIBLE P-TOUCH LABEL MAKER. TEXT SHOULD BE PRINTED IN ALL CAPS WITH A MINIMUM HEIGHT OF 1/2".

EMERGENCY CONTACT SIGN | SCALE N.T.S. | 1

NOT USED | SCALE N.T.S. | 11

NOT USED | SCALE N.T.S. | 8

NOT USED | SCALE N.T.S. | 5

ANTENNA SIGNAGE:
ON WOOD POLES - SIGN ON ALUMINUM WITH SS SCREW TO THE POLE
ON METAL POLES - ADHESIVE VINYL OR PLACARD STRAPPED WITH SS TIES
ON CONCRETE / COMPOSITE - PLACARD STRAPPED WITH SS TIES

SIGN PLACEMENT:
AFFIX TO THE STRUCTURE 3-4' BELOW THE COMMERCIAL RF ANTENNA(S)
SIZE APPROX. 8" x 5.5"

ANTENNA SIGNAGE | SCALE N.T.S. | 2

NOT USED | SCALE N.T.S. | 12

NOT USED | SCALE N.T.S. | 9

NOT USED | SCALE N.T.S. | 6

NOT USED | SCALE N.T.S. | 3

mobilitie
intelligent infrastructure

MOBILITIE, LLC

DRAWN BY:	CAM
DATE:	06/14/16

REV	DATE	DESCRIPTION	BY
0	06/14/16	90% ISSUED FOR REVIEW	CAM
B	07/17/16	90% ISSUED FOR REVIEW	ANW

IT IS A VIOLATION OF LAW FOR ANY PERSON, UNLESS THEY ARE ACTING UNDER THE DIRECTION OF A LICENSED PROFESSIONAL ENGINEER, TO ALTER THIS DOCUMENT.

SITE ID:
9WAX000687A
1010 SLEATER KINNEY RD. SE,
LACEY, WA 98503
SLEATER KINNEY RD. SE & PACIFIC AVE. SE
UTILITY POLE

SHEET TITLE
EQUIPMENT DETAILS

SHEET NUMBER
D-1

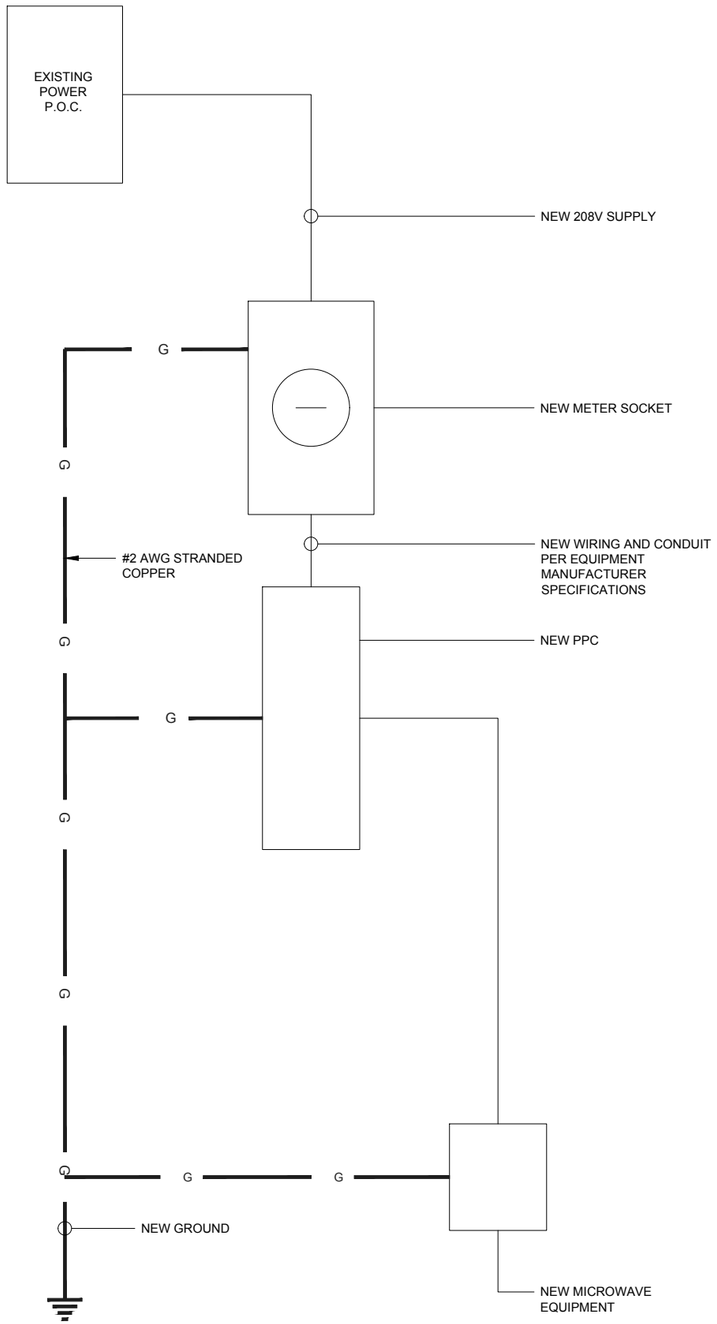

ONE-LINE DIAGRAM

24"x36" SCALE: NTS
11"x17" SCALE: NTS

2

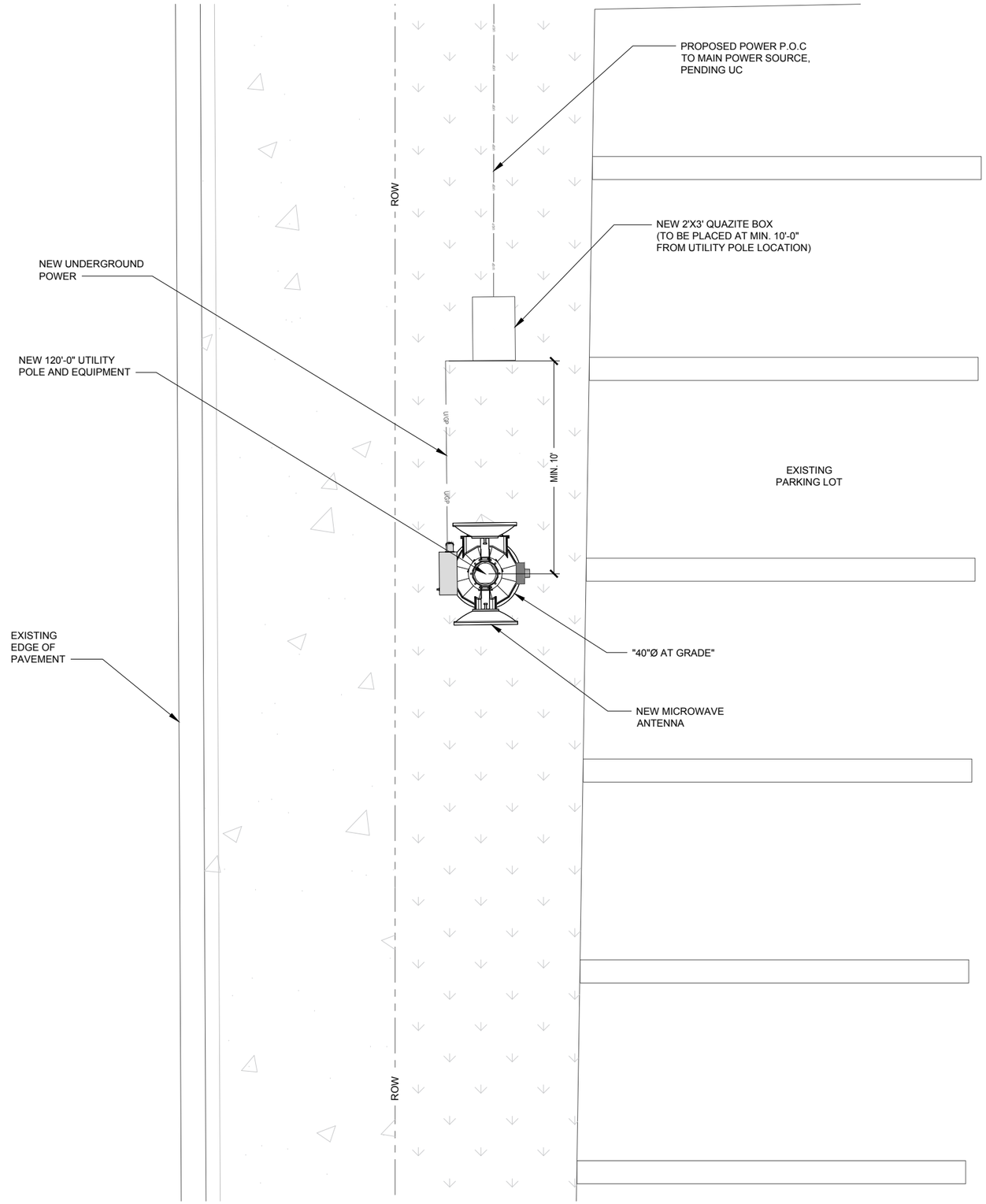

PRELIMINARY UTILITY PLAN

24"x36" SCALE: 3/8" = 1'-0"
11"x17" SCALE: 3/16" = 1'-0"

2' 1' 0" 2'

1

mobilitie
intelligent infrastructure

MOBILITIE, LLC

DRAWN BY:	CAM
DATE:	06/14/16

REV	DATE	DESCRIPTION	BY
0	06/14/16	90% ISSUED FOR REVIEW	CAM
B	07/17/16	90% ISSUED FOR REVIEW	ANW

IT IS A VIOLATION OF LAW FOR ANY PERSON, UNLESS THEY ARE ACTING UNDER THE DIRECTION OF A LICENSED PROFESSIONAL ENGINEER, TO ALTER THIS DOCUMENT.

SITE ID:
9WAX000687A

1010 SLEATER KINNEY RD. SE,
LACEY, WA 98503
SLEATER KINNEY RD. SE & PACIFIC AVE. SE
UTILITY POLE

SHEET TITLE

ELECTRICAL PLAN

SHEET NUMBER

E-1

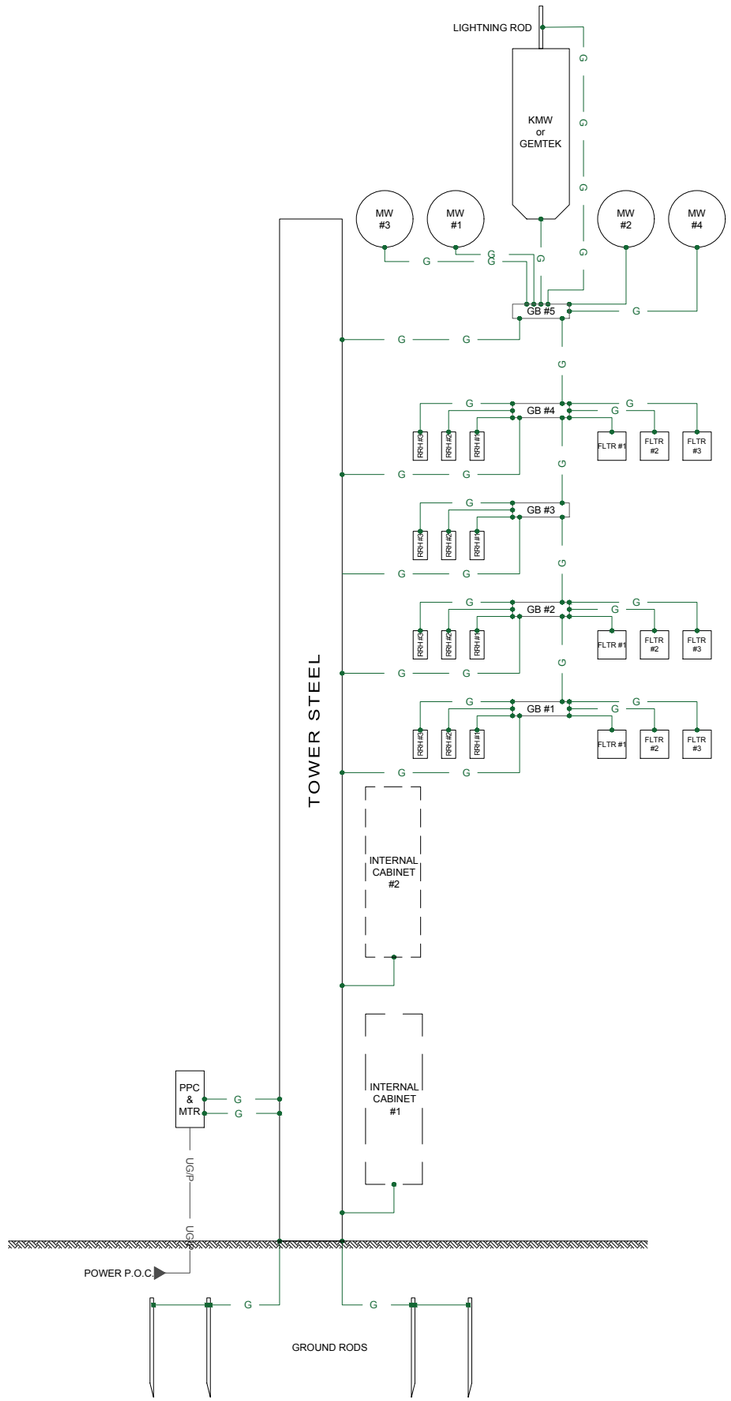

GROUNDING SCHEMATIC

24"x36" SCALE: NTS
11"x17" SCALE: NTS

4

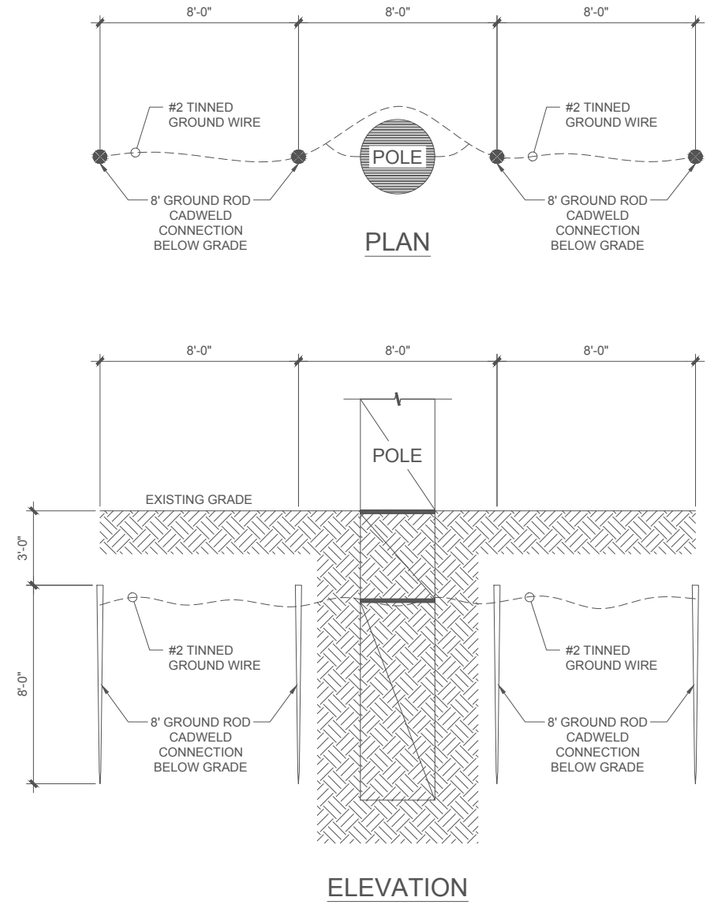

GROUND CONNECTION DETAIL

SCALE N.T.S.

1

NOTES:

1. ALL GROUNDS SHALL BE #2AWG STRANDED COPPER GREEN INSULATED WIRE UNLESS OTHERWISE SPECIFIED OR REQUIRED BY MANUFACTURER OR LOCAL ORDINANCE.
2. ALL EXPOSED MECHANICAL GROUND CONNECTIONS WILL BE MADE USING 2-HOLE LUGS OR OEM-PRESCRIBED HARDWARE.
3. ALL CONNECTIONS SHALL BE MADE WITH A PROTECTIVE COATING OF AN ANTI-OXIDE COMPOUND KNOWN AS "NO-OXIDEA" BY DEARBORNE CHEMICAL CO.
4. FOR GROUNDING TO TOWER STEEL: INSERT A CADMIUM FLAT WASHER BETWEEN LUG AND STEEL. COATING ALL SURFACES WITH "NO-OXIDE-A" COMPOUND BEFORE MATING.
5. ALL IN-EARTH GROUND CONNECTIONS WILL BE MADE USING EXOTHERMIC BONDS OR"CADWELDS".
6. CONTRACTOR TO VERIFY AND TEST GROUND TO SOURCE, 10 OHMS MAXIMUM. PROVIDE SUPPLEMENTAL GROUNDING RODS AS REQUIRED (@ 8'-0"O.C.) TO ACHIEVE SPECIFIED OHMS READING.GROUNDING AND OTHER OPTIONAL TESTING WILL BE WITNESSED BY THE APPLICANT REPRESENTATIVE.

GROUNDING NOTES

SCALE N.T.S.

3

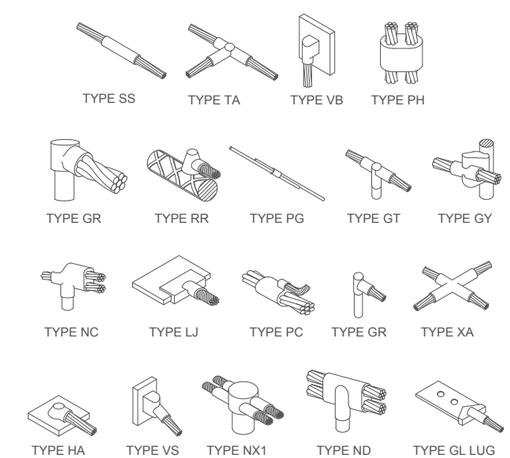

CAD WELD DETAIL

SCALE N.T.S.

2

mobilitie
intelligent infrastructure

MOBILITIE, LLC

DRAWN BY:	CAM
DATE:	06/14/16

REV	DATE	DESCRIPTION	BY
0	06/14/16	90% ISSUED FOR REVIEW	CAM
B	07/17/16	90% ISSUED FOR REVIEW	ANW

IT IS A VIOLATION OF LAW FOR ANY PERSON, UNLESS THEY ARE ACTING UNDER THE DIRECTION OF A LICENSED PROFESSIONAL ENGINEER, TO ALTER THIS DOCUMENT.

SITE ID:
9WAX000687A

1010 SLEATER KINNEY RD. SE,
LACEY, WA 98503
SLEATER KINNEY RD. SE & PACIFIC AVE. SE
UTILITY POLE

SHEET TITLE

GROUNDING PLAN

SHEET NUMBER

G-1

mobilitie
intelligent infrastructure

MOBILITIE, LLC

DRAWN BY:	CAM
DATE:	06/14/16

REV	DATE	DESCRIPTION	BY
0	06/14/16	90% ISSUED FOR REVIEW	CAM
B	07/17/16	90% ISSUED FOR REVIEW	ANW

IT IS A VIOLATION OF LAW FOR ANY PERSON, UNLESS THEY ARE ACTING UNDER THE DIRECTION OF A LICENSED PROFESSIONAL ENGINEER, TO ALTER THIS DOCUMENT.

SITE ID:
9WAX000687A

1010 SLEATER KINNEY RD. SE,
LACEY, WA 98503
SLEATER KINNEY RD. SE & PACIFIC AVE. SE
UTILITY POLE

SHEET TITLE
STRUCTURAL DETAILS

SHEET NUMBER
S-1

STRUCTURAL DETAILS

24"x36" SCALE: NTS
11"x17" SCALE: NTS

MOBILITIE, LLC

PHOTO SIMULATION

FOR NEW TRANSPORT SITE LOCATED AT:

1010 SLEATER KINNEY RD. SE & PACIFIC AVE. SE | LACEY, WA 98503

SITE ID: 9WAX000687A

VICINITY MAP

© 2016 Google

PREVIEW

SITE DESCRIPTION:

NEW TRANSPORT SITE WITHIN EXISTING RIGHT OF WAY

VIEWS: 4

SHEET INDEX

SHEET 2: VIEW 1
SHEET 3: VIEW 2
SHEET 4: VIEW 3
SHEET 5: VIEW 4

DATE: 07.26.16

Photo Simulation By:

Tangent SYSTEMS

424-262-4167 | tangentsystems.co

Photo Simulation

This photographic simulation is intended as a visual representation only and is not to be used for construction purposes. Accuracy of photo simulation is based on information provided by project applicant.

MOBILITIE, LLC

Site ID: 9WAX000687A

POLE TYPE: NEW STEEL UTILITY POLE

1010 SLEATER KINNEY RD. SE & PACIFIC AVE. SE
LACEY, WA 98503

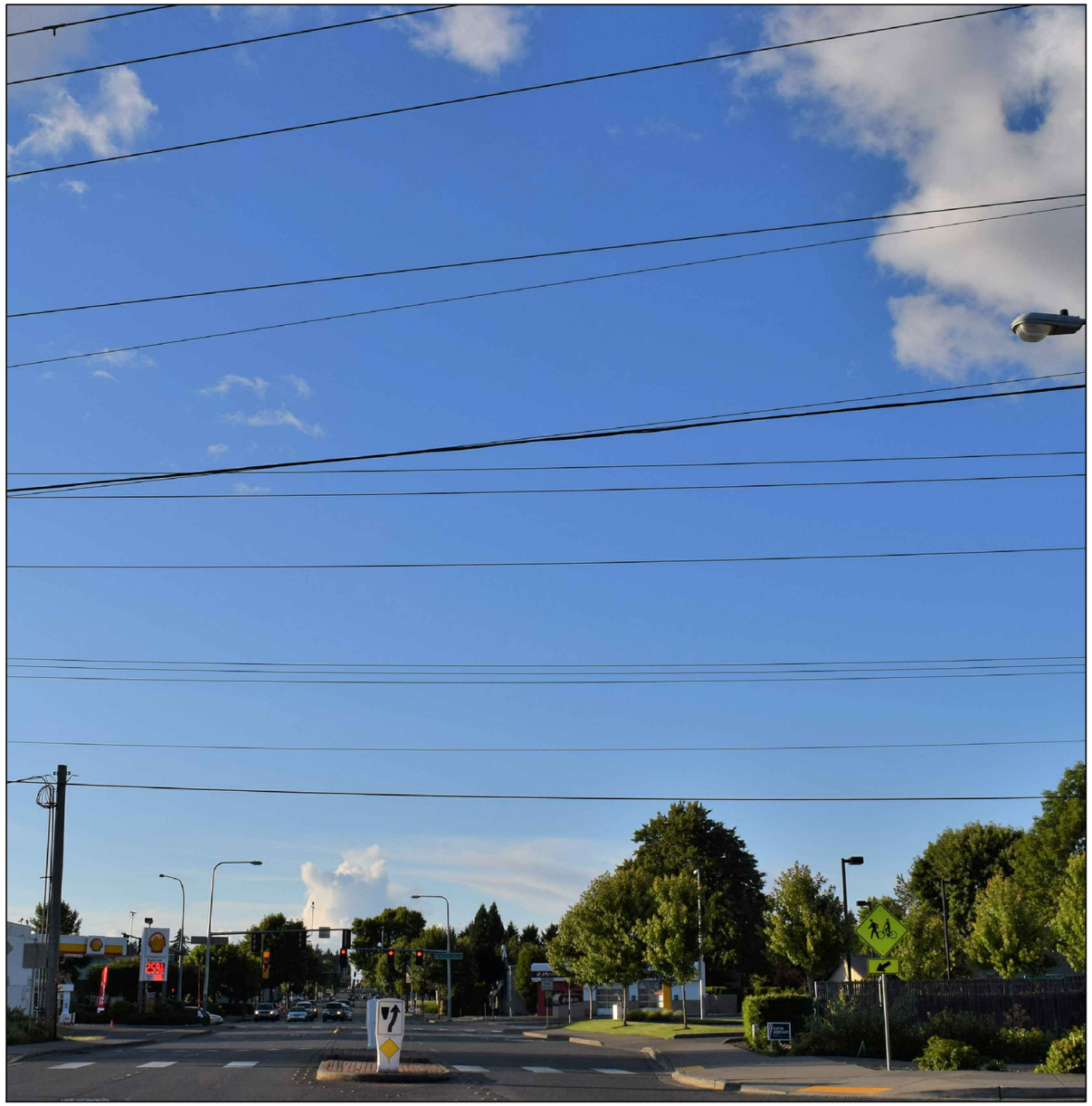

EXISTING VIEW

PROPOSED VIEW

DATE: 07.26.16

VIEW 1 - LOOKING NORTH FROM SLEATER KINNEY RD. SE

SHEET: 2 / 5

Photo Simulation By:

Tangent SYSTEMS

424-262-4167 | tangentsystems.co

Photo Simulation

This photographic simulation is intended as a visual representation only and is not to be used for construction purposes. Accuracy of photo simulation is based on information provided by project applicant.

MOBILITIE, LLC

Site ID: 9WAX000687A

POLE TYPE: NEW STEEL UTILITY POLE

1010 SLEATER KINNEY RD. SE & PACIFIC AVE. SE
LACEY, WA 98503

EXISTING VIEW

PROPOSED VIEW

DATE: 07.26.16

VIEW 2 - LOOKING WEST FROM PACIFIC AVE SE

SHEET: 3 / 5

Photo Simulation By:

Tangent SYSTEMS

424-262-4167 | tangentsystems.co

Photo Simulation

This photographic simulation is intended as a visual representation only and is not to be used for construction purposes. Accuracy of photo simulation is based on information provided by project applicant.

MOBILITIE, LLC

Site ID: 9WAX000687A

POLE TYPE: NEW STEEL UTILITY POLE

1010 SLEATER KINNEY RD. SE & PACIFIC AVE. SE
LACEY, WA 98503

EXISTING VIEW

PROPOSED VIEW

DATE: 07.26.16

VIEW 3 - LOOKING SOUTH FROM SLEATER KINNEY RD. SE

Photo Simulation By:

Tangent SYSTEMS

424-262-4167 | tangentsystems.co

Photo Simulation

This photographic simulation is intended as a visual representation only and is not to be used for construction purposes. Accuracy of photo simulation is based on information provided by project applicant.

MOBILITIE, LLC

Site ID: 9WAX000687A

POLE TYPE: NEW STEEL UTILITY POLE

1010 SLEATER KINNEY RD. SE & PACIFIC AVE. SE
LACEY, WA 98503

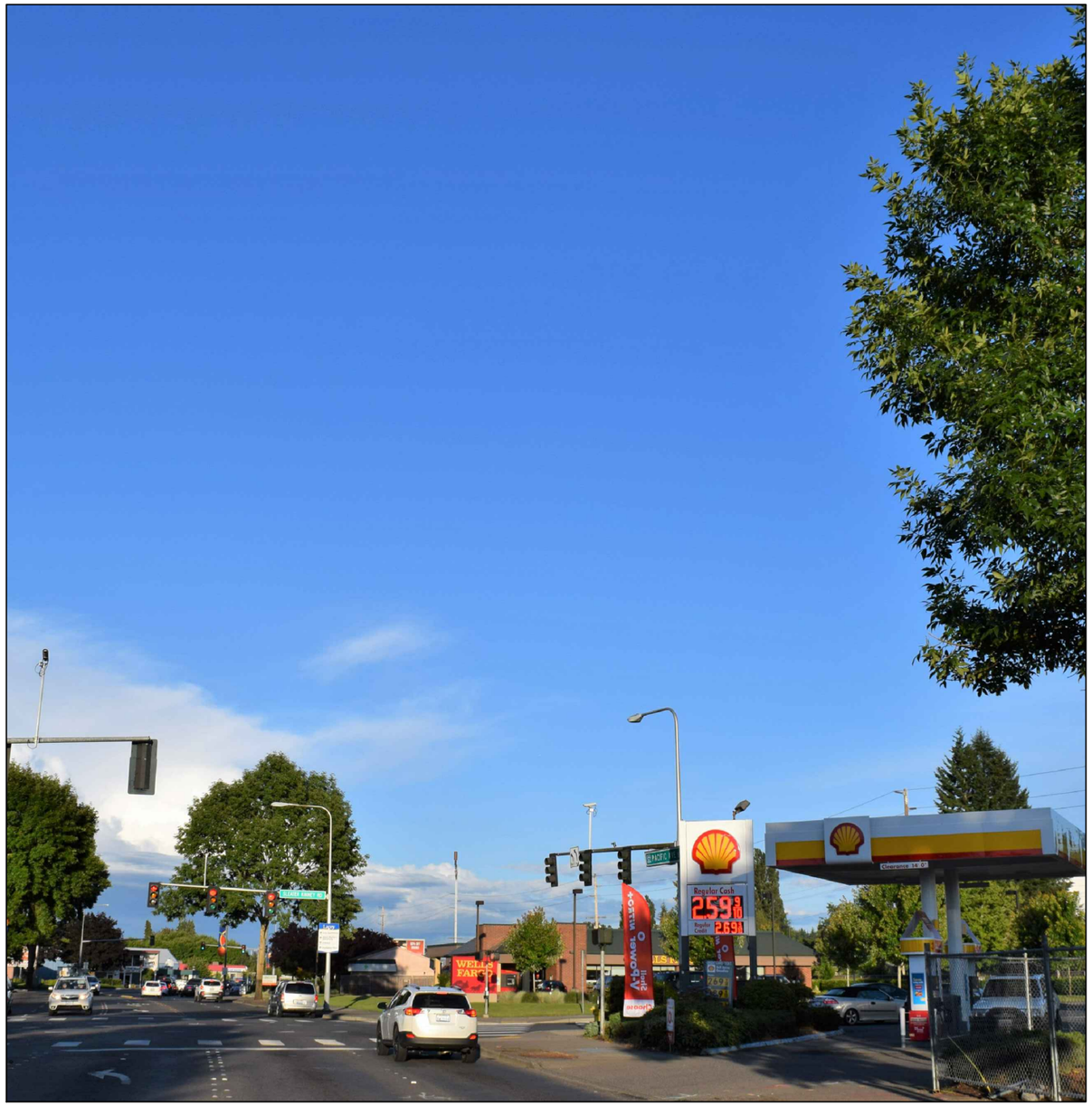

EXISTING VIEW

PROPOSED VIEW

DATE: 07.26.16

VIEW 4 - LOOKING SOUTH EAST FROM PACIFIC AVE SE

SHEET: 5 / 5

Photo Simulation By:

Tangent SYSTEMS

424-262-4167 | tangentsystems.co

Photo Simulation

This photographic simulation is intended as a visual representation only and is not to be used for construction purposes. Accuracy of photo simulation is based on information provided by project applicant.

MOBILITIE, LLC

Site ID: 9WAX000687A

POLE TYPE: NEW STEEL UTILITY POLE

1010 SLEATER KINNEY RD. SE & PACIFIC AVE. SE
LACEY, WA 98503

mobilitie®
intelligent infrastructure

SITE ID: 9WAX000691A

SITE LOCATION:
1200 GALAXY DR NE LACEY, WA 98516
GALAXY DR NE & MARTIN WAY E

NEW UTILITY STEEL POLE

811 Dig Alert
Know what's below. Call before you dig.
WASHIGNTON
Call Two Working Days Before You Dig!
1-800-STAKE IT

DO NOT SCALE DRAWINGS

SUBCONTRACTOR SHALL VERIFY ALL PLANS, EXISTING DIMENSIONS & FIELD CONDITIONS ON THE JOB SITE & SHALL IMMEDIATELY NOTIFY THE ENGINEER IN WRITING OF ANY DISCREPANCIES BEFORE PROCEEDING WITH THE WORK OR BE RESPONSIBLE FOR SAME.

GENERAL NOTES

THE FACILITY IS NOT FOR HUMAN HABITATION. A TECHNICIAN WILL VISIT THE SITE AS REQUIRED FOR ROUTINE MAINTENANCE. THE PROJECT WILL NOT RESULT IN ANY SIGNIFICANT DISTURBANCE OR EFFECT ON DRAINAGE; NO SANITARY SEWER SERVICE, POTABLE WATER, OR TRASH DISPOSAL IS REQUIRED AND NO COMMERCIAL SIGNAGE IS NEW.

SITE INFORMATION

APPLICANT:	MOBILITIE
APPLICANT ADDRESS:	2955 RED HILL AVENUE, STE. 200, COSTA MESA, CA 92626
PUBLIC ROW/PRIVATE PROPERTY:	PUBLIC ROW
NEAREST ADDRESS:	1200 GALAXY DR NE LACEY, WA 98516
NEAREST APN(S):	827-3000-0100
SITE LATITUDE:	47° 3' 28.2816" N (47.057856)
SITE LONGITUDE:	122° 46' 8.5974" W (-122.769055)
GIS TYPE:	CA83VF (NAD83)
GROUND ELEVATION:	±193' AMSL
COUNTY:	THURSTON COUNTY
JURISDICTION:	CITY OF LACEY

PROJECT TEAM

MOBILITIE, LLC
2955 RED HILL AVENUE, STE. 200,
COSTA MESA, CA 92626
APPLICANT: JUSTIN WALLEY
PHONE: 949-584-0704
EMAIL: justin.walley@itbutility.com

XD INDUSTRIES
1572 N. BATAVIA ST. SUITE 1D
ORANGE, CA 92876
CONTACT: JOSE FRIAS
PHONE: 714.947.3093
EMAIL: jfrias@xd-ind.com

LOCATION MAPS

VICINITY MAP

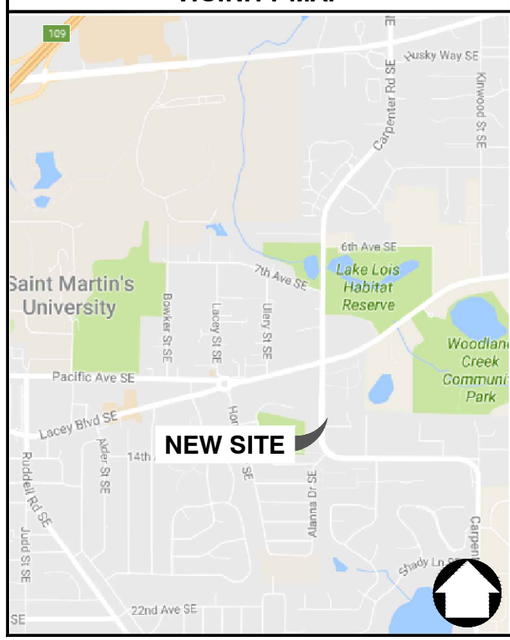

SITE LOCATION

PROJECT DESCRIPTION

MOBILITIE, LLC PROPOSES TO CONSTRUCT A NEW TRANSPORT SITE WITHIN AN EXISTING RIGHT OF WAY. THE SCOPE WILL CONSIST OF THE FOLLOWING:

- INSTALL ONE (1) - 120'-0" UTILITY STEEL POLE
- INSTALL ONE (1) QUAZITE BOX

ENGINEERING

- 2012 INTERNATIONAL BUILDING CODE
- 2014 NATIONAL ELECTRICAL CODE
- TIA/EIA-222-G-2 OR LATEST EDITION
- LOCAL BUILDING/PLANNING CODE

DRAWING INDEX

SHEET NO:	SHEET TITLE
T-1	TITLE SHEET
T-2	GENERAL NOTES
T-3	GENERAL NOTES
A-1	SITE PLANS
A-2	NORTH & EAST ELEVATIONS
D-1	DETAILS
E-1	ELECTRICAL PLAN
G-1	GROUNDING PLAN
S-1	STRUCTURAL DETAILS
TC-1	TRAFFIC CONTROL PLANS
TC-2	TRAFFIC CONTROL PLANS

mobilitie®
intelligent infrastructure

MOBILITIE, LLC

DRAWN BY:	O.T.
DATE:	08/08/2016

REV	DATE	DESCRIPTION	BY
A	08/08/2016	90% CONSTRUCTION	OT

PRELIMINARY NOT FOR CONSTRUCTION

IT IS A VIOLATION OF LAW FOR ANY PERSON, UNLESS THEY ARE ACTING UNDER THE DIRECTION OF A LICENSED PROFESSIONAL ENGINEER, TO ALTER THIS DOCUMENT.

SITE ID:
9WAX000691A
1200 GALAXY DR NE LACEY, WA 98516,
GALAXY DR NE & MARTIN WAY E

NEW STEEL UTILITY POLE

SHEET TITLE

TITLE SHEET

SHEET NUMBER

T-1

GENERAL CONSTRUCTION NOTES

1. ALL WORK SHALL CONFORM TO THE REQUIREMENTS OF THE LOCAL BUILDING CODE, THE LATEST EDITION AND ALL OTHER APPLICABLE CODES AND ORDINANCES.
2. CONTRACTOR SHALL CONSTRUCT SITE IN ACCORDANCE WITH THESE DRAWINGS AND CONSTRUCTION SPECIFICATIONS 80-T1196-1 REV H. THE SPECIFICATION IS THE RULING DOCUMENT AND ANY DISCREPANCIES BETWEEN THE SPECIFICATION AND THESE DRAWINGS SHOULD BE BROUGHT TO THE ATTENTION OF THE ENGINEER PRIOR TO PROCEEDING WITH CONSTRUCTION
3. CONTRACTOR SHALL VISIT THE JOB SITE AND SHALL FAMILIARIZE HIMSELF WITH ALL CONDITIONS AFFECTING THE PROPOSED WORK AND SHALL MAKE PROVISIONS AS TO THE COST THEREOF. CONTRACTOR SHALL BE RESPONSIBLE FOR FAMILIARIZING HIMSELF WITH ALL CONTRACT DOCUMENTS, FIELD CONDITIONS AND DIMENSIONS AND CONFIRMING THAT THE WORK MAY BE ACCOMPLISHED AS SHOWN PRIOR TO PROCEEDING WITH CONSTRUCTION. ANY DISCREPANCIES SHALL BE BROUGHT TO THE ATTENTION OF THE ENGINEER PRIOR TO THE COMMENCEMENT OF WORK. NO COMPENSATION WILL BE AWARDED BASED ON CLAIM OF LACK OF KNOWLEDGE OF FIELD CONDITIONS
4. PLANS ARE NOT TO BE SCALED. THESE PLANS ARE INTENDED TO BE A DIAGRAMMATIC OUTLINE ONLY UNLESS OTHERWISE NOTED. THE WORK SHALL INCLUDE FURNISHING MATERIALS, EQUIPMENT AND APPURTENANCES, AND LABOR NECESSARY TO EFFECT ALL INSTALLATIONS AS INDICATED ON THE DRAWINGS. OWNER PROVIDED MATERIALS WILL INCLUDE THE FOLLOWING, UNLESS NOTED OTHERWISE:
   A) TRANSMITTER
   B) COPPER OR STEEL SECTIONS PROVIDE BY CONTRACTOR
   C) MOUNTING BRACKETS, GPS ANTENNAS AND KU ANTENNAS
   D) UHF COAX AND HANGERS
   E) E-2 FOR SPECIALIZED TRANSFORMERS PROVIDED BY CONTRACTOR
   F) SHELTERS FURNISHED IN FACTORY W/ HVAC EQUIPMENT AND ELECTRICAL DISTRIBUTION PANEL
   G) INTEGRATED LOAD CENTER
5. DIMENSIONS SHOWN ARE TO FINISH SURFACES UNLESS OTHERWISE NOTED. SPACING BETWEEN EQUIPMENT IS REQUIRED CLEARANCE. THEREFORE, IT IS CRITICAL TO FIELD VERIFY DIMENSIONS, SHOULD THERE BE ANY QUESTIONS REGARDING THE CONTRACT DOCUMENTS, EXISTING CONDITIONS AND/OR DESIGN INTENT, THE CONTRACTOR SHALL BE RESPONSIBLE FOR OBTAINING THE WORK.
6. DETAILS ARE INTENDED TO SHOW DESIGN INTENT. MODIFICATIONS MAY BE REQUIRED TO SUIT JOB DIMENSIONS OR CONDITIONS, AND SUCH MODIFICATIONS SHALL BE INCLUDED AS PART OF THE WORK.
7. CONTRACTOR SHALL RECEIVE CLARIFICATION IN WRITING, AND SHALL RECEIVE IN WRITING AUTHORIZATION TO PROCEED BEFORE STARTING WORK ON ANY ITEMS NOT CLEARLY DEFINED OR IDENTIFIED BY THE CONTRACT DOCUMENTS.
8. CONTRACTOR SHALL SUPERVISE AND DIRECT THE WORK USING THE BEST CONSTRUCTION SKILLS AND ATTENTION. CONTRACTOR SHALL BE SOLELY RESPONSIBLE FOR CONSTRUCTION MEANS, METHODS, TECHNIQUES, SEQUENCES AND PROCEDURES AND FOR COORDINATING ALL PORTIONS OF THE WORK UNDER CONTRACT, UNLESS OTHERWISE NOTED.
9. CONTRACTOR SHALL BE RESPONSIBLE FOR THE SAFETY OF THE WORK AREA, ADJACENT AREAS AND BUILDING OCCUPANTS THAT ARE LIKELY TO BE AFFECTED BY THE WORK UNDER THIS CONTRACT. WORK SHALL CONFORM TO ALL OSHA REQUIREMENTS.
10. CONTRACTOR SHALL COORDINATE HIS WORK WITH THE SUPERINTENDENT OF BUILDINGS & GROUNDS AND SCHEDULE HIS ACTIVITIES AND WORKING HOURS IN ACCORDANCE WITH THE REQUIREMENTS.
11. CONTRACTOR SHALL BE RESPONSIBLE FOR COORDINATING HIS WORK WITH THE WORK OF OTHERS AS IT MAY RELATE TO RADIO EQUIPMENT, ANTENNAS AND ANY OTHER PORTIONS OF THE WORK.
12. INSTALL ALL EQUIPMENT AND MATERIALS IN ACCORDANCE WITH MANUFACTURERS RECOMMENDATIONS UNLESS SPECIFICALLY OTHERWISE INDICATED OR WHERE LOCAL CODES OR REGULATIONS TAKE PRECEDENCE.
13. MAKE NECESSARY PROVISIONS TO PROTECT EXISTING SURFACES, EQUIPMENT, IMPROVEMENTS, PIPING ETC. AND IMMEDIATELY REPAIR ANY DAMAGE THAT OCCURS DURING CONSTRUCTION.
14. IN DRILLING HOLES INTO CONCRETE WHETHER FOR FASTENING OR ANCHORING PURPOSES, OR PENETRATIONS THROUGH THE FLOOR FOR CONDUIT RUNS, PIPE RUNS, ETC., MUST BE CLEARLY UNDERSTOOD THAT REINFORCING STEEL SHALL NOT BE DRILLED INTO, CUT OR DAMAGED UNDER ANY CIRCUMSTANCES (UNLESS NOTED OTHERWISE). LOCATIONS OF REINFORCING STEEL ARE NOT DEFINITELY KNOWN AND THEREFORE MUST BE SEARCHED FOR BY APPROPRIATE METHODS AND EQUIPMENT.
15. REPAIR ALL EXISTING WALL SURFACES DAMAGED DURING CONSTRUCTION SUCH THAT THEY MATCH AND BLEND IN WITH ADJACENT SURFACES.
16. SEAL PENETRATIONS THROUGH FIRE RATED AREAS WITH U.L. LISTED AND FIRE CODE APPROVED MATERIALS.
17. KEEP CONTRACT AREA CLEAN, HAZARD FREE, AND DISPOSE OF ALL DIRT, DEBRIS, AND RUBBISH. EQUIPMENT NOT SPECIFIED AS REMAINING ON THE PROPERTY OF THE OWNER SHALL BE REMOVED. LEAVE PREMISES IN CLEAN CONDITION AND FREE FROM PAINT SPOTS, DUST, OR SMUDGES OF ANY NATURE. CONTRACTOR SHALL BE RESPONSIBLE FOR MAINTAINING ALL ITEMS UNTIL COMPLETION OF CONSTRUCTION.
18. MINIMUM BEND RADIUS OF ANTENNA CABLES SHALL BE IN ACCORDANCE WITH CABLE MANUFACTURERS RECOMMENDATIONS.
19. ALL EXISTING INACTIVE SEWER, WATER, GAS, ELECTRIC AND OTHER UTILITIES, WHICH INTERFERE WITH THE EXECUTION OF THE WORK, SHALL BE REMOVED AND/OR CAPPED, PLUGGED OR OTHERWISE DISCONTINUED AT POINTS WHICH WILL NOT INTERFERE WITH THE EXECUTION OF THE WORK, SUBJECT TO APPLICABLE REGULATORY AUTHORITIES
20. CONTRACTOR SHALL MINIMIZE DISTURBANCE TO EXISTING SITE DURING CONSTRUCTION. EROSION CONTROL MEASURES, IF REQUIRED DURING CONSTRUCTION SHALL BE IN CONFORMANCE WITH JURISDICTIONAL OR STATE AND LOCAL GUIDELINES FOR EROSION AND SEDIMENT CONTROL AND COORDINATED WITH LOCAL REGULATORY AUTHORITIES.
21. ALL CONSTRUCTION IS TO ADHERE TO (PER DBA)'S INTEGRATED CONSTRUCTION STANDARDS UNLESS STATE CODE IS MORE STRINGENT.
22. THE INTENT OF THE PLANS AND SPECIFICATIONS IS TO PERFORM THE CONSTRUCTION IN ACCORDANCE PER STATE BUILDING STANDARDS CODE, TITLES 19 AND 24, STATE CODE OF REGULATIONS. SHOULD ANY CONDITIONS DEVELOP NOT COVERED BY THE APPROVED PLANS AND SPECIFICATIONS WHEREIN THE FINISHED WORK WILL NOT COMPLY PER STATE CODE OF REGULATIONS, A CHANGE ORDER DETAILING AND SPECIFYING THE REQUIRED WORK SHALL BE SUBMITTED TO AND APPROVED BY THE JURISDICTION BEFORE PROCEEDING WITH THE WORK.

ELECTRICAL NOTES

1. ELECTRICAL CONTRACTOR SHALL SUPPLY AND INSTALL ANY/ALL ELECTRICAL WORK INDICATED. ANY/ALL CONSTRUCTION SHALL BE IN ACCORDANCE W/DRAWINGS AND ANY/ALL APPLICABLE SPECIFICATIONS. IF ANY PROBLEMS ARE ENCOUNTERED BY COMPLYING WITH THESE REQUIREMENTS, CONTRACTOR SHALL NOTIFY 'CONSTRUCTION MANAGER' AS SOON AS POSSIBLE, AFTER THE DISCOVERY OF THE PROBLEMS, AND SHALL NOT PROCEED WITH THAT PORTION OF WORK, UNTIL THE 'CONSTRUCTION MANAGER' HAS DIRECTED THE CORRECTIVE ACTIONS TO BE TAKEN.
2. ELECTRICAL CONTRACTOR SHALL VISIT THE JOB SITE AND FAMILIARIZE HIMSELF WITH ANY/ALL CONDITIONS AFFECTING ELECTRICAL AND COMMUNICATION INSTALLATION AND MAKE PROVISIONS AS TO THE COST THEREOF. ALL EXISTING CONDITIONS OF ELECTRICAL EQUIP., LIGHT FIXTURES, ETC., THAT ARE PART OF THE FINAL SYSTEM, SHALL BE VERIFIED BY THE CONTRACTOR, PRIOR TO THE SUBMITTING OF HIS BID. FAILURE TO COMPLY WITH THIS PARAGRAPH WILL IN NO WAY RELIEVE CONTRACTOR OF PERFORMING ALL WORK NECESSARY FOR A COMPLETE AND WORKING SYSTEM.
3. ALL WORK SHALL BE PERFORMED IN ACCORDANCE WITH THE LATEST EDITION OF THE NEC AND ALL CODES AND LOCAL ORDINANCES OF THE LOCAL POWER & TELEPHONE COMPANIES HAVING JURISDICTION AND SHALL INCLUDE BUT NOT BE LIMITED TO:
   C - NATIONAL FIRE CODES
   A. UL - UNDERWRITERS LABORATORIES
   B. NEC - NATIONAL ELECTRICAL CODE
   C. NEMA - NATIONAL ELECTRICAL MANUFACTURERS ASSOC.
   D. OSHA - OCCUPATIONAL SAFETY AND HEALTH ACT
   E. SBC - STANDARD BUILDING CODE
4. DO NOT SCALE ELECTRICAL DRAWINGS, REFER TO SITE PLANS AND ELEVATIONS FOR EXACT LOCATIONS OF ALL EQUIPMENT, AND CONFIRM WITH 'CONSTRUCTION MANAGER' ANY SIZES AND LOCATIONS WHEN NEEDED.
5. EXISTING SERVICES: CONTRACTOR SHALL NOT INTERRUPT EXISTING SERVICES WITHOUT WRITTEN PERMISSION OF THE OWNER.
6. CONTRACTOR SHALL PAY FOR ANY/ALL PERMITS, FEES, INSPECTIONS AND TESTING. CONTRACTOR IS TO OBTAIN PERMITS AND APPROVED SUBMITTALS PRIOR TO THE WORK BEGINNING OR ORDERING EQUIPMENT.
7. THE TERM "PROVIDE" USED IN CONSTRUCTION DOCUMENTS AND SPECIFICATIONS, INDICATES THAT THE CONTRACTOR SHALL FURNISH AND INSTALL.
8. CONTRACTOR SHALL CONFIRM WITH LOCAL UTILITY COMPANY ANY/ALL REQUIREMENTS SUCH AS THE: LUG SIZE RESTRICTIONS, CONDUIT ENTRY, SIZE OF TRANSFORMERS, SCHEDULED DOWNTIME FOR THE OWNERS' CONFIRMATION, ETC... ANY/ALL CONFLICTS SHALL BE BROUGHT TO THE ATTENTION OF THE CONSTRUCTION MANAGER, PRIOR TO BEGINNING ANY WORK.
9. MINIMUM WIRE SIZE SHALL BE #12 AWG, NOT INCLUDING CONTROL WIRING, UNLESS NOTED OTHERWISE. ALL CONDUCTORS SHALL BE COPPER WITH THWN INSULATION.
10. OUTLET BOXES SHALL BE PRESSED STEEL IN DRY LOCATIONS, CAST ALLOY WITH THREADED HUBS IN WET/DAMP LOCATIONS AND SPECIAL ENCLOSURES FOR OTHER CLASSIFIED AREAS.
11. IT IS NOT THE INTENT OF THESE PLANS TO SHOW EVERY MINOR DETAIL OF THE CONSTRUCTION. CONTRACTOR IS EXPECTED TO FURNISH AND INSTALL ALL ITEMS FOR A COMPLETE ELECTRICAL SYSTEM AND PROVIDE ALL REQUIREMENTS FOR THE EQUIPMENT TO BE PLACED IN PROPER WORKING ORDER.
12. ELECTRICAL SYSTEM SHALL BE AS COMPLETELY AND EFFECTIVELY GROUNDED, AS REQUIRED BY SPECIFICATIONS, SET FORTH BY (PER DBA) REPRESENTATIVE.
13. ALL WORK SHALL BE PERFORMED BY A LICENSED ELECTRICAL CONTRACTOR IN A FIRST CLASS, WORKMANLIKE MANNER. THE COMPLETED SYSTEM SHALL BE FULLY OPERATIVE AND SUBJECT TO REGULATORY INSPECTION AND APPROVAL BY CONSTRUCTION MANAGER.
14. ALL WORK SHALL BE COORDINATED WITH OTHER TRADES TO AVOID INTERFERENCE WITH THE PROGRESS OF CONSTRUCTION.
15. CONTRACTOR SHALL GUARANTEE ANY/ALL MATERIALS AND WORK FREE FROM DEFECTS FOR A PERIOD OF NOT LESS THAN ONE YEAR FROM DATE OF ACCEPTANCE.
16. THE CORRECTION OF ANY DEFECTS SHALL BE COMPLETED WITHOUT ANY ADDITIONAL CHARGE AND SHALL INCLUDE THE REPLACEMENT OR THE REPAIR OF ANY OTHER PHASE OF THE INSTALLATION, WHICH MAY HAVE BEEN DAMAGED THEREIN.
17. ADEQUATE AND REQUIRED LIABILITY INSURANCE SHALL BE PROVIDED FOR PROTECTION AGAINST PUBLIC LOSS AND ANY/ALL PROPERTY DAMAGE FOR THE DURATION OF WORK.
18. PROVIDE AND INSTALL CONDUIT, CONDUCTORS, PULL WIRES, BOXES, COVER PLATES AND DEVICES FOR ALL OUTLETS AS INDICATED.
19. DITCHING AND BACK FILL: CONTRACTOR SHALL PROVIDE FOR ALL UNDERGROUND INSTALLED CONDUIT AND/OR CABLES INCLUDING EXCAVATION AND BACKFILLING AND COMPACTION. REFER TO NOTES AND REQUIREMENTS 'EXCAVATION, AND BACKFILLING.
20. MATERIALS, PRODUCTS AND EQUIPMENT, INCLUDING ALL COMPONENTS THEREOF, SHALL BE NEW AND SHALL APPEAR ON THE LIST OF U.L. APPROVED ITEMS AND SHALL MEET OR EXCEED THE REQUIREMENTS OF THE NEC, NEMA AND IECE.
21. CONTRACTOR SHALL SUBMIT SHOP DRAWINGS OR MANUFACTURES CATALOG INFORMATION OF ANY/ALL LIGHTING FIXTURES, SWITCHES AND ALL OTHER ELECTRICAL ITEMS FOR APPROVAL BY THE CONSTRUCTION MANAGER PRIOR TO INSTALLATION.
22. ANY CUTTING OR PATCHING DEEMED NECESSARY FOR ELECTRICAL WORK IS THE ELECTRICAL CONTRACTORS RESPONSIBILITY AND SHALL BE INCLUDED IN THE COST FOR WORK AND PERFORMED TO THE SATISFACTION OF THE 'CONSTRUCTION MANAGER' UPON FINAL ACCEPTANCE.
23. THE ELECTRICAL CONTRACTOR SHALL LABEL ALL PANELS WITH ONLY TYPEWRITTEN DIRECTORIES. ALL ELECTRICAL WIRING SHALL BE THE RESPONSIBILITY OF THE ELECTRICAL CONTRACTOR.
24. DISCONNECT SWITCHES SHALL BE H.P. RATED HEAVY-DUTY, QUICK-MAKE AND QUICK-BREAK ENCLOSURES, AS REQUIRED BY EXPOSURE TYPE.
25. ALL CONNECTIONS SHALL BE MADE WITH A PROTECTIVE COATING OF AN ANTI-OXIDE COMPOUND SUCH AS "NO-OXIDE A" BY DEARBORNE CHEMICAL CO. COAT ALL WIRE SURFACES BEFORE CONNECTING. EXPOSED COPPER SURFACES, INCLUDING GROUND BARS, SHALL BE TREATED - NO SUBSTITUTIONS.
26. RACEWAYS: CONDUIT SHALL BE SCHEDULE 40 PVC MEETING OR EXCEEDING NEMA TC2 - 1990. CONTRACTOR SHALL PLUG AND CAP EACH END OF SPARE AND EMPTY CONDUITS AND PROVIDE TWO SEPARATE PULL STRINGS - 200 LBS TEST POLYETHYLENE CORD. ALL CONDUIT BENDS SHALL BE A MINIMUM OF 2 FT. RADIUS. RGS CONDUITS WHEN SPECIFIED, SHALL MEET UL-6 FOR GALVANIZED STEEL. ALL FITTINGS SHALL BE SUITABLE FOR USE WITH THREADED RIGID CONDUIT. COAT ALL THREADS WITH 'BRITE ZINC' OR 'COLD GALV'.
27. SUPPORT OF ALL ELECTRICAL WORK SHALL BE AS REQUIRED BY NEC.
28. CONDUCTORS: CONTRACTOR SHALL USE 98% CONDUCTIVITY COPPER WITH TYPE THWN INSULATION, 600 VOLT, COLOR CODED. USE SOLID CONDUCTORS FOR WIRE UP TO AND INCLUDING NO. 8 AWG. USE STRANDED CONDUCTORS FOR WIRE ABOVE NO. 8 AWG.
29. CONNECTORS FOR POWER CONDUCTORS: CONTRACTOR SHALL USE PRESSURE TYPE INSULATED TWIST-ON CONNECTORS FOR NO. 10 AWG AND SMALLER. USE SOLDERLESS MECHANICAL TERMINAL LUGS FOR NO. 8 AWG AND LARGER.
30. SERVICE: 240/120V, SINGLE PHASE, 3 WIRE CONNECTION AVAILABLE FROM UTILITY COMPANY. OWNER OR OWNERS AGENT WILL APPLY FOR POWER.
31. TELEPHONE SERVICE: CONTRACTOR SHALL PROVIDE EMPTY CONDUITS WITH PULL STRINGS AS INDICATED ON DRAWINGS.
32. ELECTRICAL AND TELCO RACEWAYS TO BE BURIED A MINIMUM OF 2' DEPTH.
33. CONTRACTOR SHALL PLACE TWO LENGTHS OF WARNING TAPE AT A DEPTH OF 12" BELOW GROUND AND DIRECTLY ABOVE ELECTRICAL AND TELCO SERVICE CONDUITS. CAUTIONS TAPE TO READ "CAUTION BURIED ELECTRIC" OR "BURIED TELECOMM".
34. ALL BOLTS SHALL BE STAINLESS STEEL

GROUNDING NOTES

1. COMPRESSION CONNECTIONS (2), #6 AWG BARE TINNED SOLID COPPER CONDUCTORS TO GROUNDING BAR. ROUTE CONDUCTORS TO BURIED GROUNDING RING AND PROVIDE PARALLEL EXOTHERMIC WELD.
2. EC SHALL USE PERMANENT MARKER TO DRAW THE LINES BETWEEN EACH SECTION AND LABEL EACH SECTION ("P", "A", "N", "T") WITH 1" HIGH LETTERS.
3. ALL HARDWARE 3-16 STAINLESS STEEL, INCLUDING LOCK WASHERS, COAT ALL SURFACES WITH AN ANTI-OXIDANT COMPOUND BEFORE MATING. ALL HARDWARE SHALL BE STAINLESS STEEL 3/8 INCH DIAMETER OR LARGER.
4. FOR GROUND BOND TO STEEL ONLY: INSERT A CADMIUM FLAT WASHER BETWEEN LUG AND STEEL, COAT ALL SURFACES WITH AN ANTI-OXIDANT COMPOUND BEFORE MATING.
5. NUT & WASHER SHALL BE PLACED ON THE FRONT SIDE OF THE GROUNDING BAR AND BOLTED ON THE BACK SIDE.
6. NUMBER OF GROUNDING BARS MAY VARY DEPENDING ON THE TYPE OF UTILITY POLE, ANTENNA LOCATION, AND CONNECTION ORIENTATION. PROVIDE AS REQUIRED.
7. WHEN THE SCOPE OF WORK REQUIRES THE ADDITION OF A GROUNDING BAR TO AN EXISTING UTILITY POLE,THE SUBCONTRACTOR SHALL OBTAIN APPROVAL FROM THE UTILITY POLE OWNER PRIOR TO MOUNTING THE GROUNDING BAR TO THE UTILITY POLE.
8. ALL ELECTRICAL AND GROUNDING AT THE UTILITY POLE SITE SHALL COMPLY WITH THE NATIONAL ELECTRICAL CODE (NEC), NATIONAL FIRE PROTECTION ASSOCIATION (NFPA) 780 (LATEST EDITION), AND MANUFACTURER.

ADDITIONAL NOTES:

9. ALL DETAILS ARE SHOWN IN GENERAL TERMS. ACTUAL GROUNDING INSTALLATION AND CONSTRUCTION MAY VARY DUE TO SITE SPECIFIC CONDITIONS.
10. GROUND ALL ANTENNA BASES, FRAMES, CABLE RUNS, AND OTHER METALLIC COMPONENTS USING #2 GROUND WIRES AND CONNECT TO SURFACE MOUNTED GROUND BUS BARS AS SHOWN. FOLLOW ANTENNA AND BTS MANUFACTURER'S PRACTICES FOR GROUNDING REQUIREMENTS. GROUND COAX SHIELD AT BOTH ENDS USING MANUFACTURERS PRACTICES ALL UNDERGROUND WATER PIPES, METAL CONDUITS AND GROUNDS THAT ARE A PART OF THIS SYSTEM SHALL BE BONDED TOGETHER.
11. ALL GROUND CONNECTIONS SHALL BE #6 AWG U.N.O. ALL WIRES SHALL BE COPPER WITH THHN/THWN. ALL GROUND WIRE SHALL BE SOLID TIN COATED OR STRANDED GREEN INSULATED WIRE.
12. CONTRACTOR TO VERIFY AND TEST GROUND TO SOURCE, 5 OHMS MAXIMUM. PROVIDE SUPPLEMENT GROUNDING RODS AS REQUIRED TO ACHIEVE SPECIFIED OHMS READING. GROUNDING AND OTHER OPTIONAL TESTING WILL BE WITNESSED BY THE (PER DBA) REPRESENTATIVE.
13. NOTIFY ARCHITECT/ENGINEER IF THERE ARE ANY DIFFICULTIES INSTALLING GROUNDING SYSTEM DUE TO SITE SOIL CONDITIONS.
14. BARE GROUNDING CONDUCTOR SHALL BE HARD DRAWN TINNED COPPER SIZES AS NOTED ON PLAN.
15. ALL HORIZONTALLY RUN GROUNDING CONDUCTORS SHALL BE INSTALLED MINIMUM 12" BELOW GRADE/FROST-LINE IN TRENCH, U.N.O., AND BACK FILL SHALL BE COMPACTED AS REQUIRED BY ARCHITECT.
16. ALL GROUND CONDUCTORS SHALL BE RUN AS STRAIGHT AND SHORT AS POSSIBLE, WITH A MINIMUM 12" BENDING RADIUS NOT LESS THAN 90 DEGREES.
17. ALL SUPPORT STRUCTURES, CABLE CHANNEL WAYS OR WIRE GUIDES SHALL BE BONDED TO GROUND SYSTEM AT A POINT NEAREST THE MAIN GROUNDING BUS "MGB" (OR DIRECTLY TO GROUND-RING).
18. ACCEPTABLE CONNECTIONS FOR GROUNDING SYSTEM SHALL BE:
   a. BURNDY, HY-GRADE U.L. LISTED CONNECTORS FOR OUTDOOR USE OR AS APPROVED BY (PER DBA) PROJECT MANAGER.
   b. CADWELD, EXOTHERMIC WELDS (WELDED CONNECTIONS).
   c. TWO -(2) HOLE TINNED COPPER COMPRESSION (LONG BARREL) FITTINGS (BUS BAR CONNECTIONS).
19. ALL CRIMPED CONNECTIONS SHALL HAVE EMBOSSED MANUFACTURER'S DIEMARK VISIBLE AT THE CRIMP (RESULTING FROM USE OF PROPER CRIMPING DEVICES).
20. PRIOR TO ANY LUG-BUSSBAR CONNECTIONS, THE BUSSBAR SHALL BE CLEANED BY USE OF "SCOTCH-BRITE' OR PLAIN STEEL WOOL AS TO REMOVE ALL SURFACE OXIDATION AND CONTAMINANTS. A COATING OF "NO-OX-ID" SHALL BE APPLIED TO THE CONNECTION SURFACES.
21. ALL CONNECTION HARDWARE SHALL BE TYPE 3-16 STAINLESS STEEL (NOT ATTRACTED TO MAGNETS).
22. THE GROUND RING SHALL BE INSTALLED 24" MINIMUM BEYOND ANY BUILDING DRIP LINE.
23. ELECTRICAL SERVICE EQUIPMENT GROUNDING SHALL COMPLY WITH NEC, ARTICLE 250-82 AND SHALL BOND ALL EXISTING AND NEW GROUNDING ELECTRODES. NEW GROUNDING ELECTRODE SHALL INCLUDE BUT NOT LIMITED TO GROUND RODS, GROUND RING IF SERVICE IS WITHIN THE RADIO EQUIPMENT LOCATION, BUILDING STEEL IF APPLICABLE, COLD WATER CONNECTIONS MUST BE MADE ON THE STREET SIDE OF MAIN SHUT-OFF VALVE.

TESTING AND EQUIPMENT TURN UP REQUIREMENTS

1. RF CABLE, DATA CABLE, RADIO EQUIPMENT AND BACK HAUL EQUIPMENT TESTING WILL COMPLY WITH CURRENT INDUSTRY STANDARDS AND OR THOSE STANDARDS OF THE EQUIPMENT MANUFACTURE OR PROVIDED TO THE CONTRACTOR PRIOR TO TESTING.
2. CONTRACTOR WILL USE THE APPROPRIATE CALIBRATED TESTING EQUIPMENT IN THE TESTING OF RF CABLE, DATA CABLE, RADIO EQUIPMENT AND BACK HAUL EQUIPMENT THAT MEET INDUSTRY STANDARDS OF THE MANUFACTURE OR THOSE STANDARDS PROVIDED TO THE CONTRACTOR PRIOR TO TESTING.
3. CONTRACTOR TO VERIFY AND RECORD ALL TEST RESULTS AND PROVIDE THESE RESULTS WITHIN THE FINAL CLOSE OUT PACKAGE.
4. ALL PERSONNEL INVOLVED IN THE TESTING OF RF CABLE, DATA CABLE, RADIO EQUIPMENT AND BACK HAUL EQUIPMENT WILL BE REQUIRED TO HAVE BEEN TRAINED AND OR CERTIFIED IN THE PROPER TESTING OF RF CABLE, DATA CABLE, RADIO EQUIPMENT AND BACK HAUL EQUIPMENT.
5. ALL TEST RESULTS SHALL BE TIME STAMPED, RECORDED AND PRESENTED PRIOR TO ENERGIZING AND TURN UP OF ANY EQUIPMENT.
6. GPS EQUIPMENT IS NOT TO BE TESTED OR ATTACHED TO ANY CABLING DURING TESTING, DOING SO WILL DAMAGE THE GPS UNIT.
7. PRIOR TO TESTING IF THE CONTRACTOR HAS ANY QUESTIONS ABOUT THE TESTING PROCEDURES THEY ARE TO CALL AND OBTAIN ASSISTANCE FROM A QUALIFIED DESIGNATED TESTING REPRESENTATIVE.
8. EQUIPMENT IS NOT TO BE ENERGIZED UNTIL ALL TESTING HAS BEEN COMPLETED, APPROVED AND THE APPROPRIATE AUTHORITY HAS BEEN NOTIFIED AND GIVES APPROVAL TO ENERGIZE THE EQUIPMENT.

MISCELLANEOUS MATERIALS

FROM TIME TO TIME IT MAY BE NECESSARY TO MAKE MINOR ADJUSTMENTS TO ACCOMMODATE, LEVEL OR SPACE ANTENNA MOUNTS AND EQUIPMENT. EXAMPLE ADDING A WASHER OR SHIM TO LEVEL OUT A BRACKET OR MOUNT TO MEET SPECIFICATIONS. HAVING TO OFFSET OR SPACE A BRACKET OR MOUNT DUE TO FLANGES AND OR OTHER SMALL PROTRUSIONS ON A POLE TOP ASSEMBLY. ANY MATERIALS, NUTS, BOLTS, SHIMS OR SPACERS USED TO ACCOMMODATE ADJUSTMENTS TO ANTENNA MOUNTS AND EQUIPMENT MUST BE PERMANENTLY AFFIXED, BOLTED TO THE MOUNT, BRACKET OR POLE; AS NEVER TO BECOME A FALL HAZARD. ALL MATERIALS NUTS, BOLTS, SHIMS OR SPACERS USED IN MINOR ADJUSTMENTS, MUST BE EITHER STAINLESS STEEL OR GALVANIZED; HALF WASHERS ARE PROHIBITED. ANY MINOR ADJUSTMENTS TO ACCOMMODATE ANTENNA MOUNTS AND EQUIPMENT SHOULD BE DONE IN A PROFESSIONAL MANOR WITH SAFETY AND AESTHETICS IN MIND. SHOULD YOU HAVE ANY QUESTIONS CONTACT YOUR ASSIGNED CONSTRUCTION PROJECT MANAGER OR ENGINEER FOR GUIDANCE.

mobilitie
intelligent infrastructure

MOBILITIE, LLC

DRAWN BY:	O.T.
DATE:	08/08/2016

REV	DATE	DESCRIPTION	BY
A	08/08/2016	90% CONSTRUCTION	OT

PRELIMINARY NOT FOR CONSTRUCTION

IT IS A VIOLATION OF LAW FOR ANY PERSON, UNLESS THEY ARE ACTING UNDER THE DIRECTION OF A LICENSED PROFESSIONAL ENGINEER, TO ALTER THIS DOCUMENT.

SITE ID:
9WAX000691A
1200 GALAXY DR NE LACEY, WA 98516,
GALAXY DR NE & MARTIN WAY E

NEW STEEL UTILITY POLE

SHEET TITLE

GENERAL NOTES

SHEET NUMBER

T-2

SITE WORK NOTES

1. DO NOT EXCAVATE OR DISTURB BEYOND THE PROPERTY LINES OR LEASE LINES, UNLESS OTHERWISE NOTED.
2. DO NOT SCALE BUILDING DIMENSIONS FROM DRAWING.
3. SIZE, LOCATION AND TYPE OF ANY UNDERGROUND UTILITIES OR IMPROVEMENTS SHALL BE ACCURATELY NOTED AND PLACED ON AS-BUILT DRAWINGS BY GENERAL CONTRACTOR AND ISSUED TO ARCHITECT/ENGINEER AT COMPLETION OF PROJECT.
4. ALL EXISTING UTILITIES, FACILITIES, CONDITIONS AND THEIR DIMENSIONS SHOWN ON PLANS HAVE. BEEN PLOTTED FROM AVAILABLE RECORDS. THE ENGINEER AND OWNER ASSUME NO RESPONSIBILITY WHATSOEVER AS TO THE SUFFICIENCY OR ACCURACY OF THE INFORMATION SHOWN ON THE PLANS OR THE MANNER OF THEIR REMOVAL OR ADJUSTMENT. CONTRACTOR SHALL BE RESPONSIBLE FOR DETERMINING EXACT LOCATION OF ALL EXISTING UTILITIES AND FACILITIES PRIOR TO START OF CONSTRUCTION. CONTRACTOR SHALL ALSO OBTAIN FROM EACH UTILITY COMPANY DETAILED INFORMATION RELATIVE TO WORKING SCHEDULES AND METHODS OF REMOVING OR ADJUSTING EXISTING UTILITIES.
5. CONTRACTOR SHALL VERIFY ALL EXISTING UTILITIES BOTH HORIZONTALLY AND VERTICALLY PRIOR TO START OF CONSTRUCTION. ANY DISCREPANCIES OR DOUBTS AS TO THE INTERPRETATION OF PLANS SHALL BE IMMEDIATELY REPORTED TO THE ARCHITECT/ENGINEER FOR RESOLUTION AND INSTRUCTION, AND NO FURTHER WORK SHALL BE PERFORMED UNTIL THE DISCREPANCY IS CHECKED AND CORRECTED BY THE ARCHITECT/ENGINEER. FAILURE TO SECURE SUCH INSTRUCTION MEANS CONTRACTOR WILL HAVE WORKED AT HIS/HER OWN RISK AND EXPENSE. CONTRACTOR SHALL CALL LOCAL DIGGER HOT LINE FOR UTILITY LOCATIONS 48 HOURS PRIOR TO START OF CONSTRUCTION.
6. ALL NEW AND EXISTING UTILITY STRUCTURES ON SITE AND IN AREAS TO BE DISTURBED BY CONSTRUCTION SHALL BE ADJUSTED TO FINISH ELEVATIONS PRIOR TO FINAL INSPECTION OF WORK.
7. GRADING OF THE SITE WORK AREA IS TO BE SMOOTH AND CONTINUOUS IN SLOPE AND IS TO FEATHER INTO EXISTING GRADES AT THE GRADING LIMITS.
8. ALL TEMPORARY EXCAVATIONS FOR THE INSTALLATION OF FOUNDATIONS, UTILITIES, ETC., SHALL BE PROPERLY LAID BACK OR BRACED IN ACCORDANCE WITH CORRECT OCCUPATIONAL SAFETY AND HEALTH ADMINISTRATION (OSHA) REQUIREMENTS.
9. STRUCTURAL FILLS SUPPORTING PAVEMENTS SHALL BE COMPACTED TO 95% OF MAXIMUM STANDARD PROCTOR DRY DENSITY.
10. NEW GRADES NOT IN BUILDING AND DRIVEWAY IMPROVEMENT AREA TO BE ACHIEVED BY FILLING WITH APPROVED CLEAN FILL AND COMPACTED TO 95% OF STANDARD PROCTOR DENSITY.
11. ALL FILL SHALL BE PLACED IN UNIFORM LIFTS. THE LIFTS THICKNESS SHOULD NOT EXCEED THAT WHICH CAN BE PROPERLY COMPACTED THROUGHOUT ITS ENTIRE DEPTH WITH THE EQUIPMENT AVAILABLE.
12. ANY FILLS PLACED ON EXISTING SLOPES THAT ARE STEEPER THAN 10 HORIZONTAL TO 1 VERTICAL SHALL BE PROPERLY BENCHED INTO THE EXISTING SLOPE AS DIRECTED BY A GEOTECHNICAL ENGINEER.
13. CONTRACTOR SHALL CLEAN ENTIRE SITE AFTER CONSTRUCTION SUCH THAT NO PAPERS, TRASH, WEEDS, BRUSH OR ANY OTHER DEPOSITS WILL REMAIN. ALL MATERIALS COLLECTED DURING CLEANING OPERATIONS SHALL BE DISPOSED OF OFF-SITE BY THE GENERAL CONTRACTOR.
14. ALL TREES AND SHRUBS WHICH ARE NOT IN DIRECT CONFLICT WITH THE IMPROVEMENTS SHALL BE PROTECTED BY THE GENERAL CONTRACTOR.
15. ALL SITE WORK SHALL BE CAREFULLY COORDINATED BY GENERAL CONTRACTOR WITH LOCAL UTILITY COMPANY, TELEPHONE COMPANY, AND ANY OTHER UTILITY COMPANIES HAVING JURISDICTION OVER THIS LOCATION.

ENVIRONMENTAL NOTES

1. ALL WORK PERFORMED SHALL BE DONE IN ACCORDANCE WITH ISSUED PERMITS. THE CONTRACTOR SHALL BE RESPONSIBLE FOR PAYMENT OF FINES AND PROPER CLEAN UP FOR AREAS IN VIOLATION.
2. CONTRACTOR AND/OR DEVELOPER SHALL BE RESPONSIBLE FOR CONSTRUCTION AND MAINTENANCE OF EROSION AND SEDIMENTATION CONTROLS DURING CONSTRUCTION FOR PROTECTION OF ADJACENT PROPERTIES, ROADWAYS AND WATERWAYS AND SHALL BE MAINTAINED IN PLACE THROUGH FINAL JURISDICTIONAL INSPECTION & RELEASE OF SITE.
3. CONTRACTOR SHALL INSTALL/CONSTRUCT ALL NECESSARY SEDIMENT/SILT CONTROL FENCING AND PROTECTIVE MEASURES WITHIN THE LIMITS OF SITE DISTURBANCE PRIOR TO CONSTRUCTION.
4. NO SEDIMENT SHALL BE ALLOWED TO EXIT THE PROPERTY. THE CONTRACTOR IS RESPONSIBLE FOR TAKING ADEQUATE MEASURES FOR CONTROLLING EROSION. ADDITIONAL SEDIMENT CONTROL FENCING MAY BE REQUIRED IN ANY AREAS SUBJECT TO EROSION.
5. THE CONTRACTOR IS RESPONSIBLE FOR MAINTAINING POSITIVE DRAINAGE ON THE SITE AT ALL TIMES WITH SILT AND EROSION CONTROL MEASURES MAINTAINED ON THE DOWNSTREAM SIDE OF SITE DRAINAGE. ANY DAMAGE TO ADJACENT PROPERTY AS A RESULT OF EROSION WILL BE CORRECTED AT THE CONTRACTORS EXPENSE.
6. CONTRACTOR SHALL BE RESPONSIBLE FOR DAILY INSPECTIONS AND ANY REPAIRS OF ALL SEDIMENT CONTROL MEASURES INCLUDING SEDIMENT REMOVAL AS NECESSARY.
7. CLEARING OF VEGETATION AND TREE REMOVAL SHALL BE ONLY AS PERMITTED AND BE HELD TO A MINIMUM. ONLY TREES NECESSARY FOR CONSTRUCTION OF THE FACILITIES SHALL BE REMOVED.
8. SEEDING AND MULCHING AND/OR SODDING OF THE SITE WILL BE ACCOMPLISHED AS SOON AS POSSIBLE AFTER COMPLETION OF THE PROJECT FACILITIES AFFECTING LAND DISTURBANCE.
9. CONTRACTOR SHALL PROVIDE ALL EROSION AND SEDIMENTATION CONTROL MEASURES AS REQUIRED BY LOCAL, COUNTY AND STATE CODES AND ORDINANCES TO PROTECT EMBANKMENTS FROM SOIL LOSS AND TO PREVENT ACCUMULATION OF SOIL AND SILT IN STREAMS AND DRAINAGE PATHS LEAVING THE CONSTRUCTION AREA. THIS MAY INCLUDE SUCH MEASURES AS SILT FENCES, STRAW BALE SEDIMENT BARRIERS, AND CHECK DAMS.
10. RIP RAP OF SIZES INDICATED SHALL CONSIST OF CLEAN, HARD, SOUND, DURABLE, UNIFORM IN QUALITY STONE FREE OF ANY DETRIMENTAL QUANTITY OF SOFT, FRIABLE, THIN, ELONGATED OR LAMINATED PIECES, DISINTEGRATED MATERIAL, ORGANIC MATTER, OIL, ALKALI, OR OTHER DELETERIOUS SUBSTANCES

FOUNDATION, EXCAVATION AND BACKFILL NOTES

1. ALL FINAL GRADED SLOPES SHALL BE A MAXIMUM OF 3 HORIZONTAL TO 1 VERTICAL.
2. ALL EXCAVATIONS PREPARED FOR PLACEMENT OF CONCRETE SHALL BE OF UNDISTURBED SOILS, SUBSTANTIALLY HORIZONTAL AND FREE FROM ANY LOOSE, UNSUITABLE MATERIAL OR FROZEN SOILS, AND WITHOUT THE PRESENCE OF POUNDING WATER. DEWATERING FOR EXCESS GROUND WATER SHALL BE PROVIDED WHEN REQUIRED. COMPACTION OF SOILS UNDER CONCRETE PAD FOUNDATIONS SHALL NOT BE LESS THAN 95% OF THE MODIFIED PROCTOR MAXIMUM DRY DENSITY FOR THE SOIL IN ACCORDANCE WITH ASTM D1557.
3. CONCRETE FOUNDATIONS SHALL NOT BE PLACED ON ORGANIC OR UNSUITABLE MATERIAL. IF INADEQUATE BEARING CAPACITY IS REACHED AT THE DESIGNED EXCAVATION DEPTH, THE UNSATISFACTORY SOIL SHALL BE EXCAVATED TO ITS FULL DEPTH AND EITHER BE REPLACED WITH MECHANICALLY COMPACTED GRANULAR MATERIAL OR THE EXCAVATION SHALL BE FILLED WITH CONCRETE OF THE SAME TYPE SPECIFIED FOR THE FOUNDATION. CRUSHED STONE MAY BE USED TO STABILIZE THE BOTTOM OF THE EXCAVATION. ANY STONE SUB BASE MATERIAL, IF USED, SHALL NOT SUBSTITUTE FOR REQUIRED THICKNESS OF CONCRETE.
4. ALL EXCAVATIONS SHALL BE CLEAN OF UNSUITABLE MATERIAL SUCH AS VEGETATION, TRASH, DEBRIS, AND SO FORTH PRIOR TO BACK FILLING. BACK FILL SHALL CONSIST OF APPROVED MATERIALS SUCH AS EARTH, LOAM, SANDY CLAY, SAND AND GRAVEL, OR SOFT SHALE, FREE FROM CLODS OR LARGE STONES OVER 2 1/2" MAX DIMENSIONS. ALL BACK FILL SHALL BE PLACED IN COMPACTED LAYERS.
5. ALL FILL MATERIALS AND FOUNDATION BACK FILL SHALL BE PLACED IN MAXIMUM 6"THICK LIFTS BEFORE COMPACTION. EACH LIFT SHALL BE WETTED IF REQUIRED AND COMPACTED TO NOT LESS THAN 95% OF THE MODIFIED PROCTOR MAXIMUM DRY DENSITY FOR SOIL IN ACCORDANCE WITH ASTM D1557.
6. NEWLY PLACED CONCRETE FOUNDATIONS SHALL CURE A MINIMUM OF 72 HRS PRIOR TO BACK FILLING.
7. FINISHED GRADING SHALL BE SLOPED TO PROVIDE POSITIVE DRAINAGE AND PREVENT STANDING WATER. THE FINAL (FINISH) ELEVATION OF SLAB FOUNDATIONS SHALL SLOPE AWAY IN ALL DIRECTIONS FROM THE CENTER. FINISH GRADE OF CONCRETE PADS SHALL BE A MAXIMUM OF 4 INCHES ABOVE FINAL FINISH GRADE ELEVATIONS. PROVIDE SURFACE FILL GRAVEL TO ESTABLISH SPECIFIED ELEVATIONS WHERE REQUIRED.
8. NEWLY GRADED SURFACE AREAS TO RECEIVE GRAVEL SHALL BE COVERED WITH GEOTEXTILE FABRIC TYPE: TYPAR-3401 AS MANUFACTURED BY "CONSTRUCTION MATERIAL 1-800-239-3841" OR AN APPROVED EQUIVALENT, SHOWN ON PLANS. THE GEOTEXTILE FABRIC SHALL BE BLACK IN COLOR TO CONTROL THE RECURRENCE OF VEGETATIVE GROWTH AND EXTEND TO WITHIN 1 FOOT OUTSIDE THE SITE FENCING OR ELECTRICAL GROUNDING SYSTEM PERIMETER WHICH EVER IS GREATER. ALL FABRIC SHALL BE COVERED WITH A MINIMUM OF 4" DEEP COMPACTED STONE OR GRAVEL AS SPECIFIED. I.E. FDOT TYPE No. 57 FOR FENCED COMPOUND; FDOT TYPE No. 67 FOR ACCESS DRIVE AREA.
9. IN ALL AREAS TO RECEIVE FILL, REMOVE ALL VEGETATION, TOPSOIL, DEBRIS, WET AND UNSATISFACTORY SOIL MATERIALS, OBSTRUCTIONS, AND DELETERIOUS MATERIALS FROM GROUND SURFACE. PLOW STRIP OR BREAK UP SLOPED SURFACES STEEPER THAN 1 VERTICAL TO 4 HORIZONTAL SUCH THAT FILL MATERIAL WILL BIND WITH EXISTING/PREPARED SOIL SURFACE.
10. WHEN SUB GRADE OR PREPARED GROUND SURFACE HAS A DENSITY LESS THAN THAT REQUIRED FOR THE FILL MATERIAL, SCARIFY THE GROUND SURFACE TO DEPTH REQUIRED, PULVERIZE, MOISTURE-CONDITION AND/OR AERATE THE SOILS AND RECOMPACT TO THE REQUIRED DENSITY PRIOR TO PLACEMENT OF FILLS.
11. IN AREAS WHICH EXISTING GRAVEL SURFACING IS REMOVED OR DISTURBED DURING CONSTRUCTION OPERATIONS, REPLACE GRAVEL SURFACING TO MATCH ADJACENT GRAVEL SURFACING AND RESTORED TO THE SAME THICKNESS AND COMPACTION AS SPECIFIED. ALL RESTORED GRAVEL SURFACING SHALL BE FREE FROM CORRUGATIONS AND WAVES.
12. EXISTING GRAVEL SURFACING MAY BE EXCAVATED SEPARATELY AND REUSED WITH THE CONDITION THAT ANY UNFAVORABLE AMOUNTS OF ORGANIC MATTER, OR OTHER DELETERIOUS MATERIALS ARE REMOVED PRIOR TO REUSE. FURNISH ANY ADDITIONAL GRAVEL RESURFACING MATERIAL AS NEEDED TO PROVIDE A FULL DEPTH COMPACTED SURFACE THROUGHOUT SITE.
13. GRAVEL SUB SURFACE SHALL BE PREPARED TO REQUIRED COMPACTION AND SUB GRADE ELEVATIONS BEFORE GRAVEL SURFACING IS PLACED AND/OR RESTORED. ANY LOOSE OR DISTURBED MATERIALS SHALL BE THOROUGHLY COMPACTED AND ANY DEPRESSIONS IN THE SUB GRADE SHALL BE FILLED AND COMPACTED WITH APPROVED SELECTED MATERIAL. GRAVEL SURFACING MATERIAL SHALL NOT BE USED FOR FILLING DEPRESSIONS IN THE SUB GRADE.
14. PROTECT EXISTING GRAVEL SURFACING AND SUB GRADE IN AREAS WHERE EQUIPMENT LOADS WILL OPERATE. USE PLANKING 'MATTS' OR OTHER SUITABLE PROTECTION DESIGNED TO SPREAD EQUIPMENT LOADS AS MAY BE NECESSARY. REPAIR ANY DAMAGE TO EXISTING GRAVEL SURFACING OR SUB GRADE WHERE SUCH DAMAGE IS DUE TO THE CONTRACTORS OPERATIONS.
15. DAMAGE TO EXISTING STRUCTURES AND/OR UTILITIES RESULTING FROM CONTRACTORS NEGLIGENCE SHALL BE REPAIRED AND/ OR REPLACED TO THE OWNERS SATISFACTION AT NO ADDITIONAL COST TO THE CONTRACT.
16. ALL SUITABLE BORROW MATERIAL FOR BACK FILL OF THE SITE SHALL BE INCLUDED IN THE BID. EXCESS TOPSOIL AND UNSUITABLE MATERIAL SHALL BE DISPOSED OF OFF SITE AT LOCATIONS APPROVED BY GOVERNING AGENCIES AT NO ADDITIONAL COST TO THE CONTRACT.

mobilitie
intelligent infrastructure

MOBILITIE, LLC

DRAWN BY:	O.T.
DATE:	08/08/2016

REV	DATE	DESCRIPTION	BY
A	08/08/2016	90% CONSTRUCTION	OT

PRELIMINARY NOT FOR CONSTRUCTION

IT IS A VIOLATION OF LAW FOR ANY PERSON, UNLESS THEY ARE ACTING UNDER THE DIRECTION OF A LICENSED PROFESSIONAL ENGINEER, TO ALTER THIS DOCUMENT.

SITE ID:
9WAX000691A
1200 GALAXY DR NE LACEY, WA 98516,
GALAXY DR NE & MARTIN WAY E

NEW STEEL UTILITY POLE

SHEET TITLE

GENERAL NOTES

SHEET NUMBER

T-3

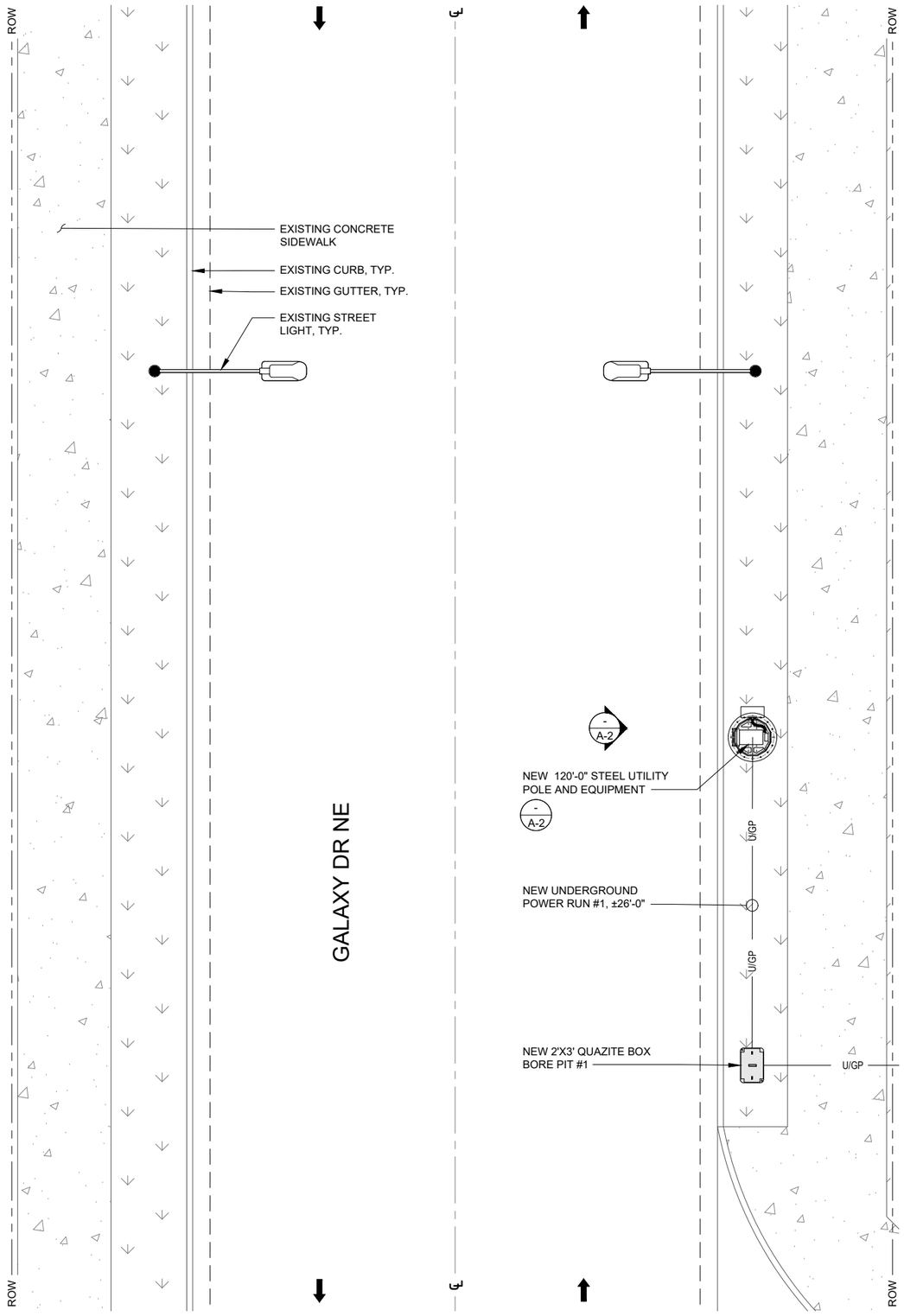

ENLARGED SITE PLAN

24"x36" SCALE: 1/8" = 1'-0"
11"x17" SCALE: 1/16" = 1'-0"

8' 6' 4' 2' 0' 8'

2

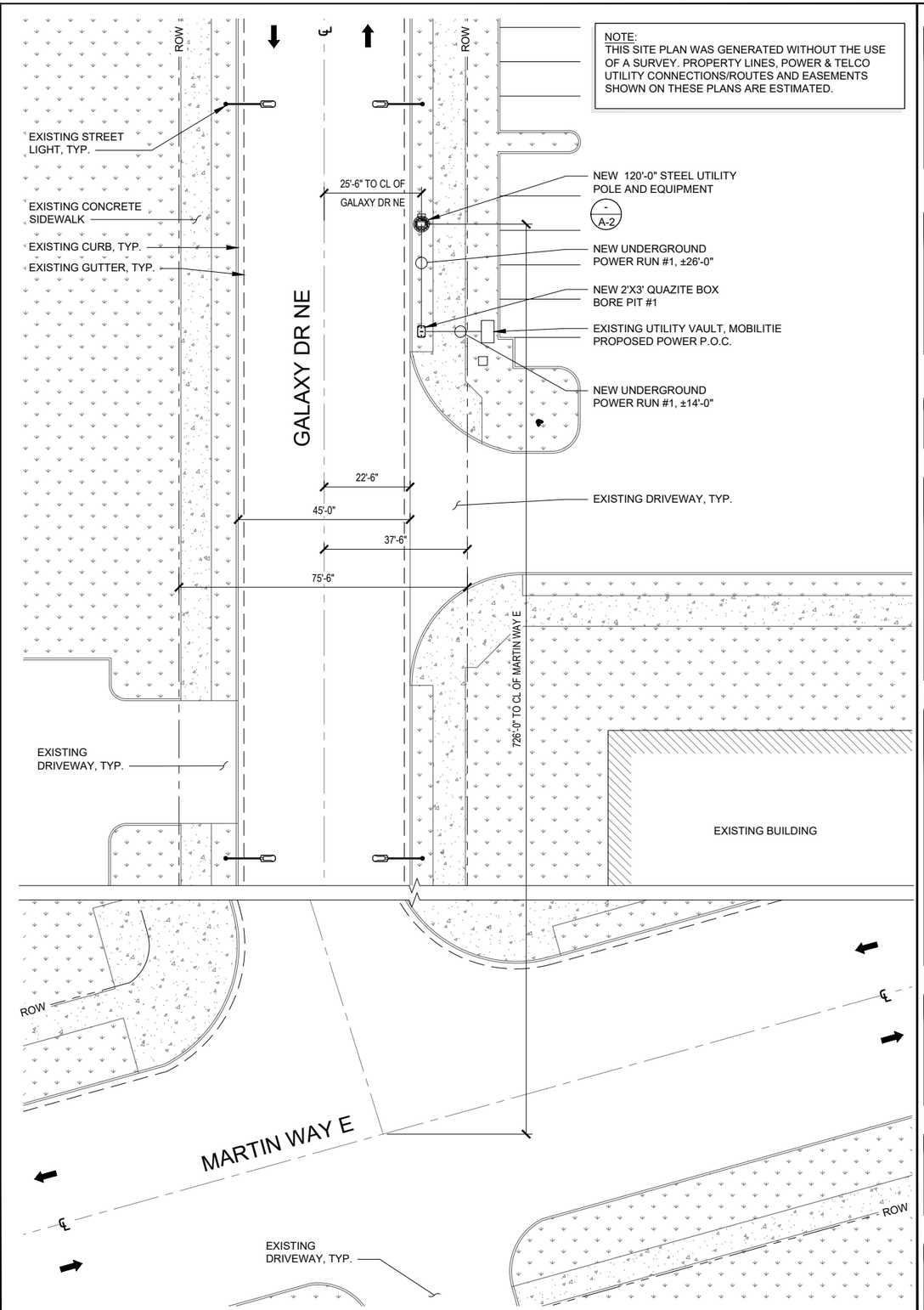

NOTE:
THIS SITE PLAN WAS GENERATED WITHOUT THE USE OF A SURVEY. PROPERTY LINES, POWER & TELCO UTILITY CONNECTIONS/ROUTES AND EASEMENTS SHOWN ON THESE PLANS ARE ESTIMATED.

SITE PLAN

24"x36" SCALE: NTS
11"x17" SCALE: NTS

1

mobilitie
intelligent infrastructure

MOBILITIE, LLC

DRAWN BY:	O.T.
DATE:	08/08/2016

REV	DATE	DESCRIPTION	BY
A	08/08/2016	90% CONSTRUCTION	OT

PRELIMINARY NOT FOR CONSTRUCTION

IT IS A VIOLATION OF LAW FOR ANY PERSON, UNLESS THEY ARE ACTING UNDER THE DIRECTION OF A LICENSED PROFESSIONAL ENGINEER, TO ALTER THIS DOCUMENT.

SITE ID:
9WAX000691A
1200 GALAXY DR NE LACEY, WA 98516,
GALAXY DR NE & MARTIN WAY E

NEW STEEL UTILITY POLE

SHEET TITLE

SITE PLANS

SHEET NUMBER

A-1

BILL OF MATERIALS CHART				
#	DESCRIPTION	CENTER LINE (AGL)	DIMENSIONS (HxWxD)	WEIGHT
-	-	-	-	-
-	-	-	-	-
-	-	-	-	-
-	-	-	-	-
-	-	-	-	-
-	-	-	-	-
-	-	-	-	-
-	-	-	-	-
-	-	-	-	-
-	-	-	-	-
-	-	-	-	-
-	-	-	-	-
-	-	-	-	-
-	-	-	-	-
-	-	-	-	-
-	-	-	-	-

EQUIPMENT CHART 3

MATERIAL STRENGTH					
GRADE	Fy	Fu	GRADE	Fy	Fu
A36	36 ksi	58 ksi	A572-50	50 ksi	65 ksi
A572-65	65 ksi	80 ksi			

MATERIAL STRENGTH CHART 4

TOWER DESIGN NOTES:

1. TOWER IS DESIGNED FOR EXPOSURE C TO THE TIA-222-G STANDARD.
2. ALL WIND SPEEDS ARE BASED ON 3 SECONDS GUSTS.
3. TOWER IS DESIGNED FOR A 90 MPH BASIC WIND IN ACCORDANCE WITH TIA-222-G STANDARD.
4. TOWER IS ALSO DESIGNED FOR A 30 MPH BASIC WIND WITH 0.75 IN ICE. ICE IS CONSIDERED TO INCREASE THICKNESS WITH HEIGHT.
5. DEFLECTIONS ARE BASED UPON A 60 MPH WIND.
6. TOWER STRUCTURE CLASS II.
7. FOUNDATION DIMENSIONS DETERMINED USING NORMAL SOILS, SITE SPECIFIC GEOTECH REQUIRED FOR FINAL DESIGN.

POLE MANUFACTURER NOTES:

1. THERMAL STUDY SHALL BE PREFORMED BY THE TOWER MANUFACTURER TO DETERMINED IF THE PROPOSED EQUIPMENT INSIDE TOWER IS BEING ADEQUATELY COOLED/HEATED AND PROVIDE A CLIMATE CONTROL SYSTEM AS NECESSARY BY DESIGN.
2. TOWER MANUFACTURER SHALL ENSURE THE TOWER IS WATERPROOF SO THAT THE INTERIOR COMPONENTS OF THE TOWER ARE NOT ADVERSELY AFFECTED BY THE EXTERIOR ELEMENTS.
3. TOWER ANALYSIS CALCULATIONS AND THERMAL STUDY SHALL BE PROVIDED TO THE ENGINEER OF RECORD WITH THE TOWER SUBMITTAL PACKAGE.
4. POLE SHAFT AND ALL PORT RIM STEEL TO BE 65 KSI.
5. ALL OTHER PLATE TO BE 50 KSI.

MAKE READY NOTES 5

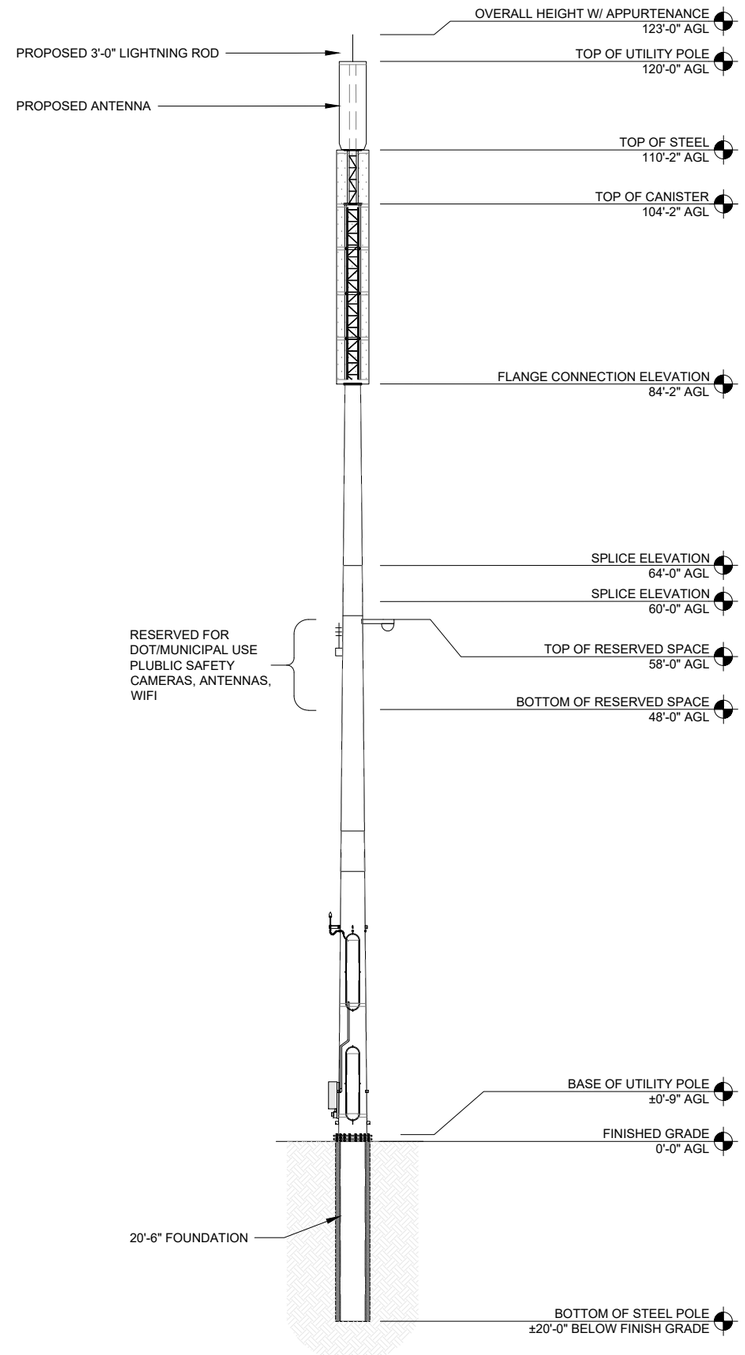

NEW WEST ELEVATION 1

24"x36" SCALE: 1/8" = 1'-0"
11"x17" SCALE: 1/16" = 1'-0"
8' 6' 4' 2' 0' 8'

mobilitie
intelligent infrastructure

MOBILITIE, LLC

DRAWN BY:	O.T.
DATE:	08/08/2016

REV	DATE	DESCRIPTION	BY
A	08/08/2016	90% CONSTRUCTION	OT

PRELIMINARY NOT FOR CONSTRUCTION

IT IS A VIOLATION OF LAW FOR ANY PERSON, UNLESS THEY ARE ACTING UNDER THE DIRECTION OF A LICENSED PROFESSIONAL ENGINEER, TO ALTER THIS DOCUMENT.

SITE ID:
9WAX000691A
1200 GALAXY DR NE LACEY, WA 98516, GALAXY DR NE & MARTIN WAY E

NEW STEEL UTILITY POLE

SHEET TITLE
WEST ELEVATIONS

SHEET NUMBER
A-2

NOT USED | SCALE N.T.S. | 10

NOT USED | SCALE N.T.S. | 7

NOT USED | SCALE N.T.S. | 4

OWNER / OPERATOR NOTE:
SITE ID LABEL TO BE AFFIXED WITH TZeS241 LABELING TAPE OR EQUIVALENT BLACK ON WHITE LABELING TAPE OF AT LEAST 18mm WIDTH WITH EXTRA-STRENGTH ADHESIVE. USE ANY COMPATIBLE P-TOUCH LABEL MAKER. TEXT SHOULD BE PRINTED IN ALL CAPS WITH A MINIMUM HEIGHT OF 1/2".

EMERGENCY CONTACT SIGN | SCALE N.T.S. | 1

NOT USED | SCALE N.T.S. | 11

NOT USED | SCALE N.T.S. | 8

NOT USED | SCALE N.T.S. | 5

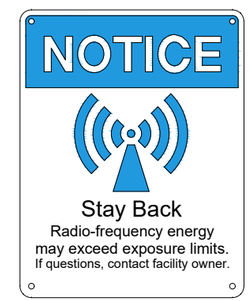

ANTENNA SIGNAGE:
ON WOOD POLES - SIGN ON ALUMINUM WITH SS SCREW TO THE POLE
ON METAL POLES - ADHESIVE VINYL OR PLACARD STRAPPED WITH SS TIES
ON CONCRETE / COMPOSITE - PLACARD STRAPPED WITH SS TIES

SIGN PLACEMENT:
AFFIX TO THE STRUCTURE 3-4' BELOW THE COMMERCIAL RF ANTENNA(S)
SIZE APPROX. 8" x 5.5"

ANTENNA SIGNAGE | SCALE N.T.S. | 2

NOT USED | SCALE N.T.S. | 12

NOT USED | SCALE N.T.S. | 9

NOT USED | SCALE N.T.S. | 6

NOT USED | SCALE N.T.S. | 12

mobilitie
intelligent infrastructure

MOBILITIE, LLC

DRAWN BY:	O.T.
DATE:	08/08/2016

REV	DATE	DESCRIPTION	BY
A	08/08/2016	90% CONSTRUCTION	OT

PRELIMINARY NOT FOR CONSTRUCTION

IT IS A VIOLATION OF LAW FOR ANY PERSON, UNLESS THEY ARE ACTING UNDER THE DIRECTION OF A LICENSED PROFESSIONAL ENGINEER, TO ALTER THIS DOCUMENT.

SITE ID:
9WAX000691A
1200 GALAXY DR NE LACEY, WA 98516,
GALAXY DR NE & MARTIN WAY E

NEW STEEL UTILITY POLE

SHEET TITLE
EQUIPMENT DETAILS

SHEET NUMBER
D-1

POLE INFORMATION

SITE NAME:	9WAX000691A
INSTALLATION TYPE:	ATTACHED TO NEW
POLE HEIGHT:	120'-0"
LAT/LONG:	47.057856, -122.769055
PROPOSED ATTACHMENT HEIGHT:	TBD
INSTALLATION TYPE:	UTILITY STEEL POLE
RECORD POLE OWNER:	TBD
RECORD POLE ID NUMBER:	
RECORD POLE DIAMETER:	TBD
DESCRIBE AC POC ON EXISTING POLE:	TBD
POWER PROVIDER:	TBD
LENGTH OF PROPOSED POWER POC:	TBD
REQUIRED TO BRING POWER POC TO SITE:	TBD
LAT/LONG OF POWER POC:	47.057856, -122.769055
VISABLE WIRED BACKHAUL OPTION:	FIBER DISTRIBUTION BOX/ETC.
SPECIAL SITE NOTES:	XXXXXXX

POLE INFORMATION 2

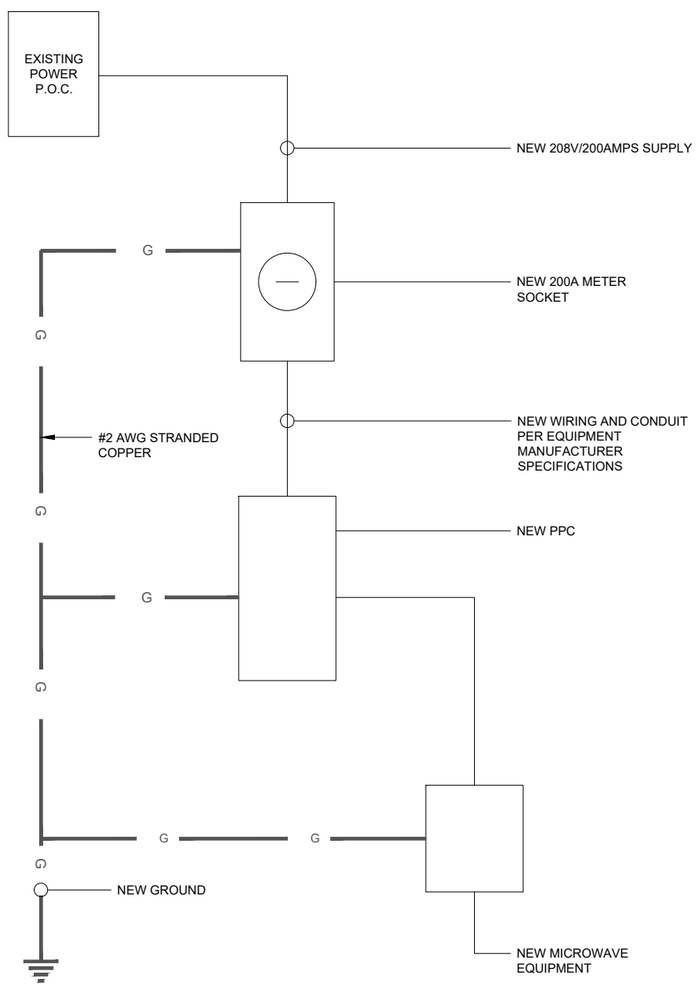

ONE-LINE DIAGRAM 3

DESCRIPTION							
CUT INTO MATERIAL		DIRT	CONCRETE	ASPHALT			
CONCRETE WORK AREA LENGHT (FT)		-					
DRIVE APPROACHES OVERALL LENGTH (FT)		-					
L x W DIRT TRENCH (FT)		LENGTH (FT)		DEPTH (FT)			
		-		-			
L x W PAVEMENT TRENCH (FT)		LENGTH (FT)		DEPTH (FT)			
		-		-			
BORE/POTHOLES	PIT #	1	2	3	4	5	6
	LENGTH (FT)	-	-	-	-	-	-

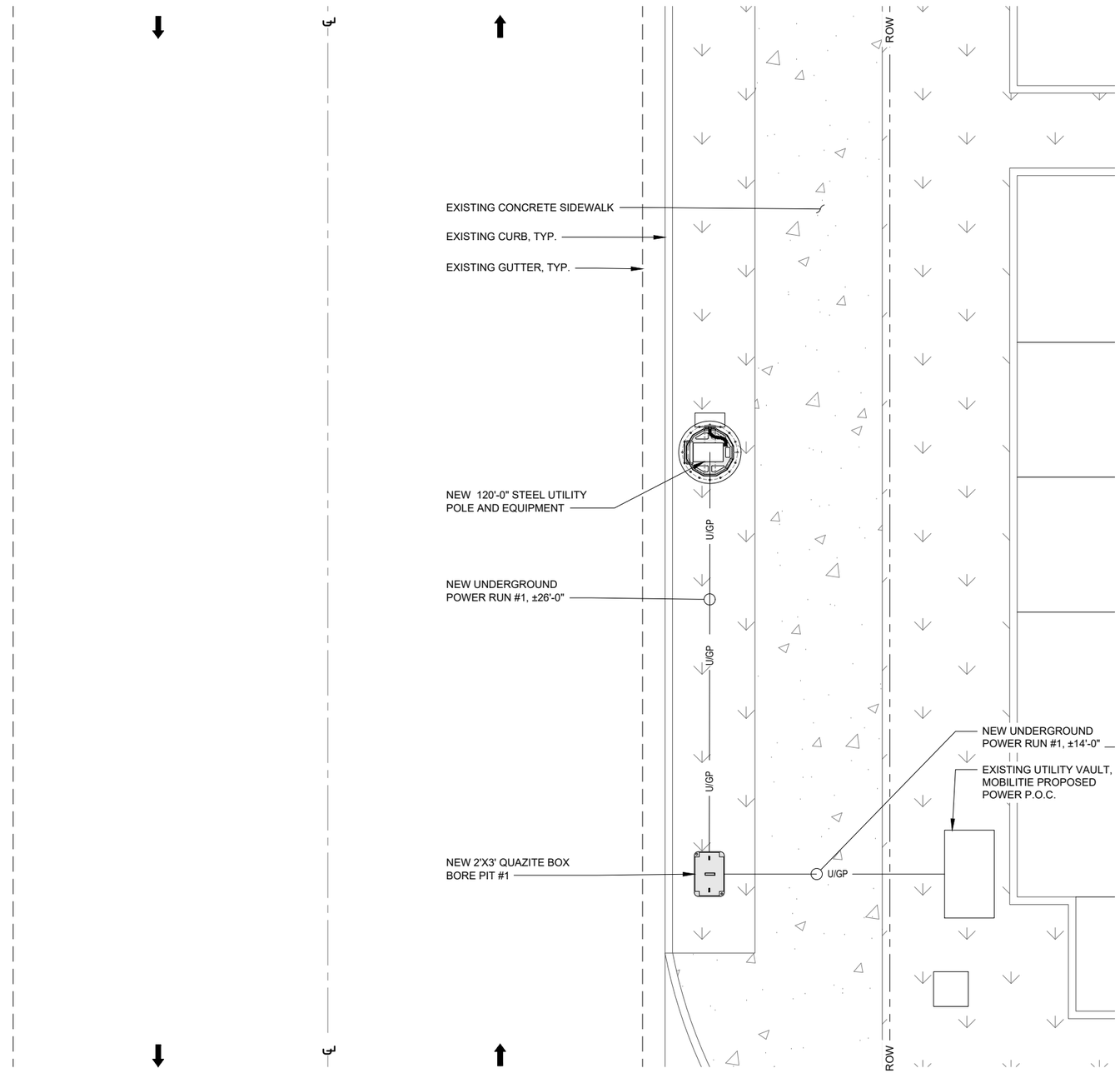

PRELIMINARY UTILITY PLAN

24"x36" SCALE: NTS
11"x17" SCALE: NTS

1

mobilitie
intelligent infrastructure

MOBILITIE, LLC

DRAWN BY:	O.T.
DATE:	08/08/2016

REV	DATE	DESCRIPTION	BY
A	08/08/2016	90% CONSTRUCTION	OT

PRELIMINARY NOT FOR CONSTRUCTION

IT IS A VIOLATION OF LAW FOR ANY PERSON, UNLESS THEY ARE ACTING UNDER THE DIRECTION OF A LICENSED PROFESSIONAL ENGINEER, TO ALTER THIS DOCUMENT.

SITE ID:
9WAX000691A
1200 GALAXY DR NE LACEY, WA 98516, GALAXY DR NE & MARTIN WAY E

NEW STEEL UTILITY POLE

SHEET TITLE

ELECTRICAL PLAN

SHEET NUMBER

E-1

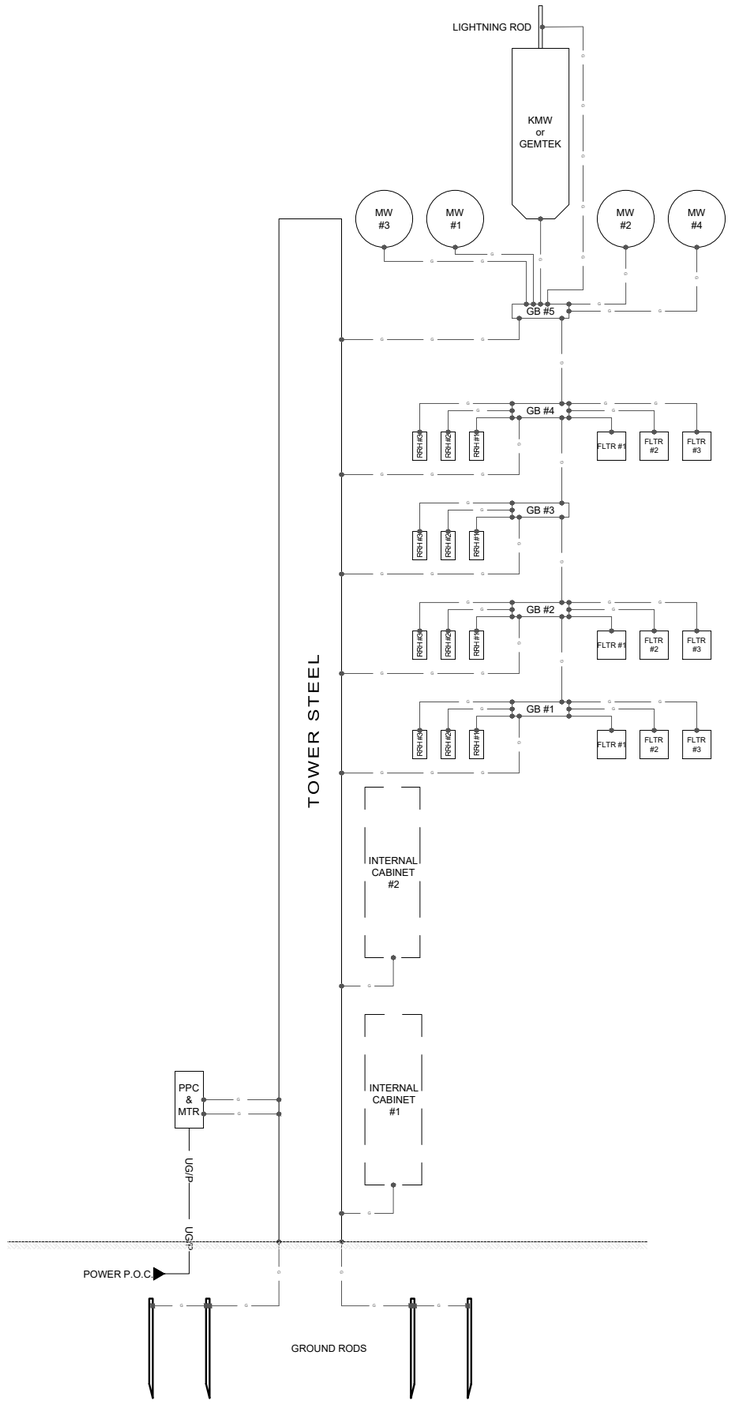

GROUNDING SCHEMATIC

SCALE N.T.S. | 4

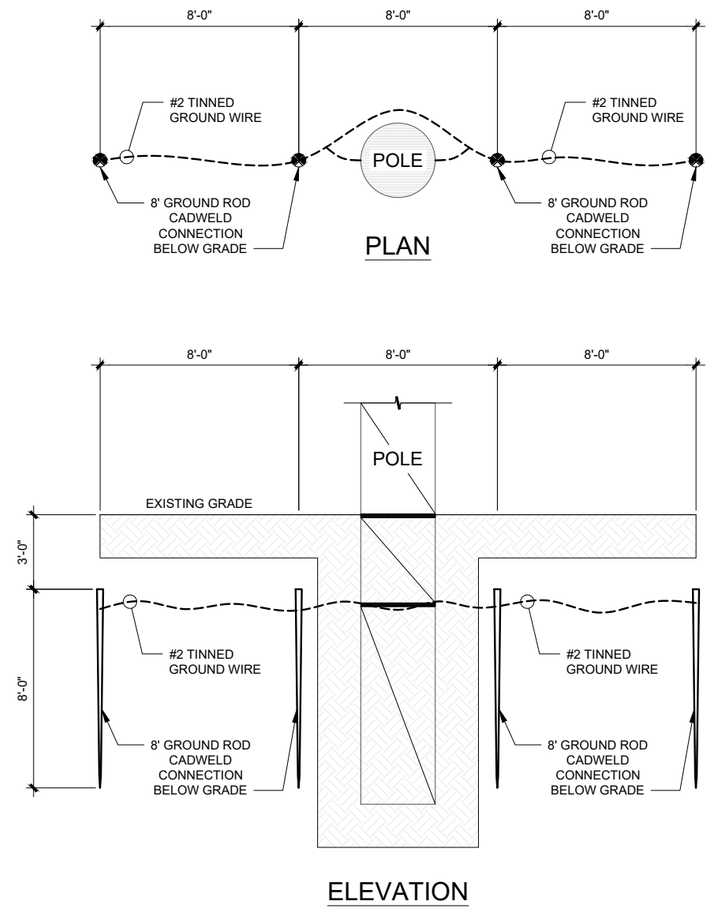

GROUND CONNECTION DETAIL

SCALE N.T.S. | 1

NOTES:

1. ALL GROUNDS SHALL BE #2AWG STRANDED COPPER GREEN INSULATED WIRE UNLESS OTHERWISE SPECIFIED OR REQUIRED BY MANUFACTURER OR LOCAL ORDINANCE.
2. ALL EXPOSED MECHANICAL GROUND CONNECTIONS WILL BE MADE USING 2-HOLE LUGS OR OEM-PRESCRIBED HARDWARE.
3. ALL CONNECTIONS SHALL BE MADE WITH A PROTECTIVE COATING OF AN ANTI-OXIDE COMPOUND KNOWN AS "NO-OXIDEA" BY DEARBORNE CHEMICAL CO.
4. FOR GROUNDING TO TOWER STEEL: INSERT A CADMIUM FLAT WASHER BETWEEN LUG AND STEEL. COATING ALL SURFACES WITH "NO-OXIDE-A" COMPOUND BEFORE MATING.
5. ALL IN-EARTH GROUND CONNECTIONS WILL BE MADE USING EXOTHERMIC BONDS OR"CADWELDS".
6. CONTRACTOR TO VERIFY AND TEST GROUND TO SOURCE, 10 OHMS MAXIMUM. PROVIDE SUPPLEMENTAL GROUNDING RODS AS REQUIRED (@ 8'-0"O.C.) TO ACHIEVE SPECIFIED OHMS READING.GROUNDING AND OTHER OPTIONAL TESTING WILL BE WITNESSED BY THE APPLICANT REPRESENTATIVE.

GROUNDING NOTES

SCALE N.T.S. | 3

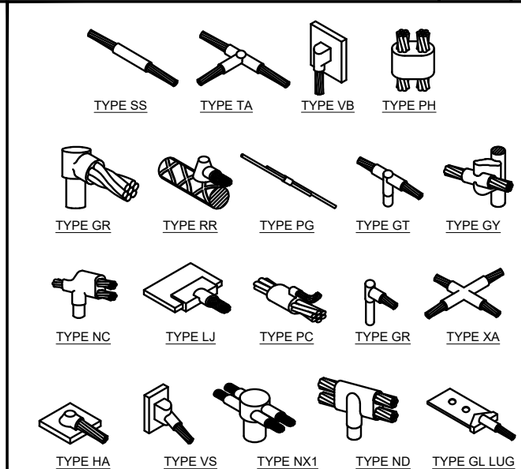

CAD WELD DETAIL

SCALE N.T.S. | 2

mobilitie
intelligent infrastructure

MOBILITIE, LLC

DRAWN BY:	O.T.
DATE:	08/08/2016

REV	DATE	DESCRIPTION	BY
A	08/08/2016	90% CONSTRUCTION	OT

PRELIMINARY NOT FOR CONSTRUCTION

IT IS A VIOLATION OF LAW FOR ANY PERSON, UNLESS THEY ARE ACTING UNDER THE DIRECTION OF A LICENSED PROFESSIONAL ENGINEER, TO ALTER THIS DOCUMENT.

SITE ID:
9WAX000691A
1200 GALAXY DR NE LACEY, WA 98516,
GALAXY DR NE & MARTIN WAY E

NEW STEEL UTILITY POLE

SHEET TITLE

GROUNDING PLAN

SHEET NUMBER

G-1

PENDING SA

mobilitie
intelligent infrastructure

MOBILITIE, LLC

DRAWN BY:	O.T.
DATE:	08/08/2016

REV	DATE	DESCRIPTION	BY
A	08/08/2016	90% CONSTRUCTION	OT

PRELIMINARY NOT FOR CONSTRUCTION

IT IS A VIOLATION OF LAW FOR ANY PERSON, UNLESS THEY ARE ACTING UNDER THE DIRECTION OF A LICENSED PROFESSIONAL ENGINEER, TO ALTER THIS DOCUMENT.

SITE ID:
9WAX000691A
1200 GALAXY DR NE LACEY, WA 98516,
GALAXY DR NE & MARTIN WAY E

NEW STEEL UTILITY POLE

SHEET TITLE
STRUCTURAL DETAILS

SHEET NUMBER
S-1

MUTCD 2014 Sign Charts

Sheet 13 of 14 - Temporary Traffic Control Signs

This chart contains commonly used federal 2009 MUTCD sign, and is not meant to be used as a comprehensive sign chart or a stand-alone sign design tool. Otherwise, federal 2009 MUTCD sign designations are shown (formerly known as sign codes).

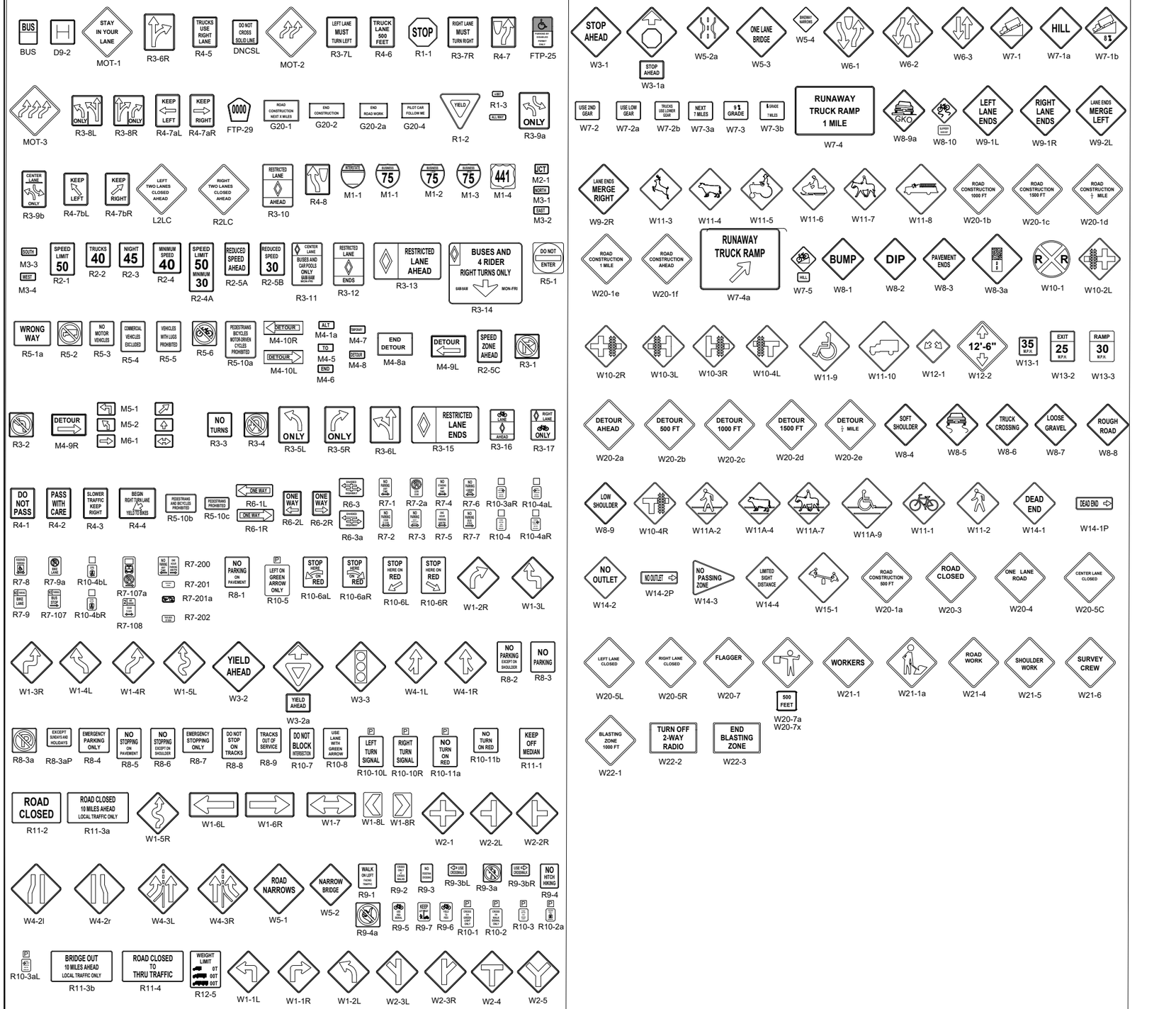

SIGN LEGEND

mobilitie
intelligent infrastructure

MOBILITIE, LLC

DRAWN BY:	O.T.
DATE:	08/08/2016

REV	DATE	DESCRIPTION	BY
A	08/08/2016	90% CONSTRUCTION	OT

PRELIMINARY NOT FOR CONSTRUCTION

IT IS A VIOLATION OF LAW FOR ANY PERSON, UNLESS THEY ARE ACTING UNDER THE DIRECTION OF A LICENSED PROFESSIONAL ENGINEER, TO ALTER THIS DOCUMENT.

SITE ID:
9WAX000691A
1200 GALAXY DR NE LACEY, WA 98516,
GALAXY DR NE & MARTIN WAY E

NEW STEEL UTILITY POLE

SHEET TITLE
TRAFFIC CONTROL PLAN

SHEET NUMBER
TC-1

**SEE TC-1 FOR SIGN SPECIFICATIONS

HOURS OF OPERATION: 6 A.M. TO 10 P.M.
CROSS STREET: GALAXY DR NE & MARTIN WAY E
WORK TYPE: UTILITIES

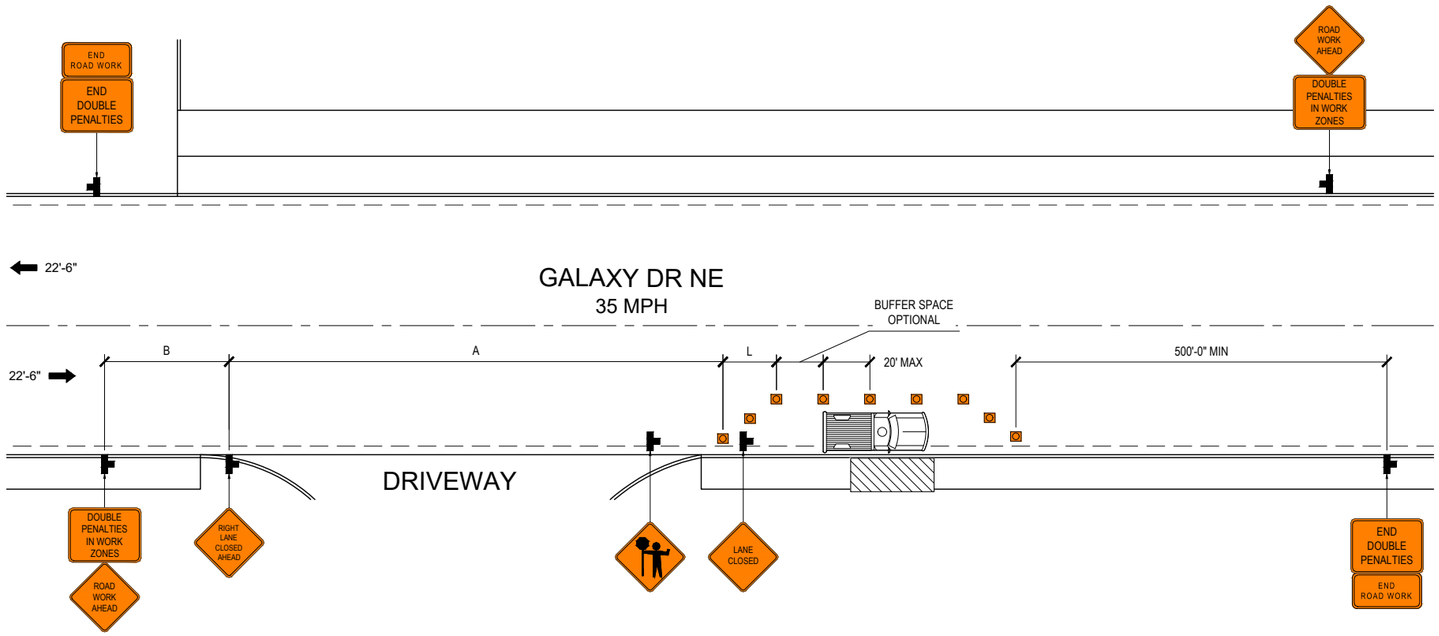

DIMENSIONS	FEET
A (DISTANCE BETWEEN SIGNS)	100
L (MERGING TAPER LENGTH)	80
1/3 L (SHOULDER OR PARKING LANE TAPER LENGTH)	30
MAXIMUM TAPER CHANNELIZING DEVICE SPACING	40
MAXIMUM TANGENT CHANNELIZING DEVICE SPACING	80

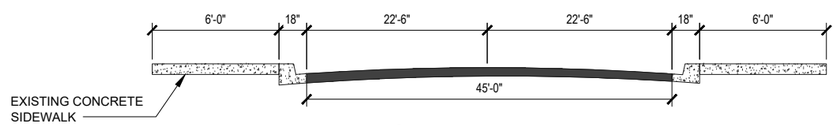

GALAXY DR NE

LINE TYPE LEGEND	
	CENTER LINE
	LANES
	GUTTER
	CURB/SIDEWALK

TRAFFIC CONTROL PLAN

24"x36" SCALE: NTS
11"x17" SCALE: NTS

1

GENERAL NOTES

1. Work operations shall be confined to one traffic lane, leaving the opposite lane open to traffic.
2. Additional one-way control may be effected by the following means:
   - Flag-carrying vehicle
   - Official vehicle
   - Pilot vehicle
   - Traffic signal
3. The "ONE LANE ROAD" signs are to be fully covered and the "FLAGGER" signs either removed or fully covered when no work is being performed and the roadway is open to two-way traffic
4. When a side road intersects the roadway within the TTC zone, additional TTC devices shall be placed in accordance with applicable TCZ Indexes.
5. The two channelizing devices directly in front of the work area and the one channelzing device directly at the end of the work area may be omitted provided vehicles in the work area have high-intensity rotating, flashing, oscillating, or strobe lights operating.
6. For general TCZ requirements and additional information, refer to MUTCD.

GENERAL NOTES 4

GENERAL NOTES

1. RETRO-REFELCTIVE SIGN SHEETING SHALL CONFORM TO SECTION 716. LATEST REVISION, OF THE UNIFORM STANDARD SPECIFICATIONS.
2. SIGN LEGENDS AND BORDERS SHALL COMPLY WITH THE REQUIREMENTS OF THE MANUAL ON UNIFORM TRAFFIC CONTROL DEVICES (MUTCD), LATEST EDITION.
3. SIGN SHALL BE MOUNTED IN CONFORMANCE WITH PART 6, MUTCD, LATEST EDITION.
4. THE "DOUBLE PENALTIES IN WORK ZONES" SIGN SHOULD BE MOUNTED WITH THE FIRST SIGN IN THE ADVANCED WARNING SIGN SERIES, TYPICALLY THE "ROAD WORK AHEAD" SIGN.
5. "END WORK ZONES" SIGN SHALL BE MOUNTED AT THE END OF THE WORK ZONE WITH THE "END DOUBLE PENALTY" SIGN, IF APPLICABLE, ON THE SAME DEVICE OR POST.
6. THE DESIGNATION OF WORK ZONE, INCLUDING MARKING OF THE DOUBLE PENALTIES, SHALL NOT BE REQUIRED ON STREETS POSTED AT 25 MPH OR LESS AND ARE THE ACCESS TO OR APPURTENANT TO A RESIDENTIAL AREA.

DURATION NOTES

1. "ROAD WORK AHEAD" and the "BE PREPARED TO STOP" signs may be omitted if all of the following conditions are met:
   a. Work operations are 60 minutes or less
   b. Speed limit is 45 MPH or less
   c. No sight obstructions to vehicles approaching the work area for a distance equal to the buffer space
   d. Vehicles in the work area have high-intensity, rotating, flashing, oscillating, or strobe lights operating
   e. Volume and complexity of the roadway has been considered

DURATION NOTES 3

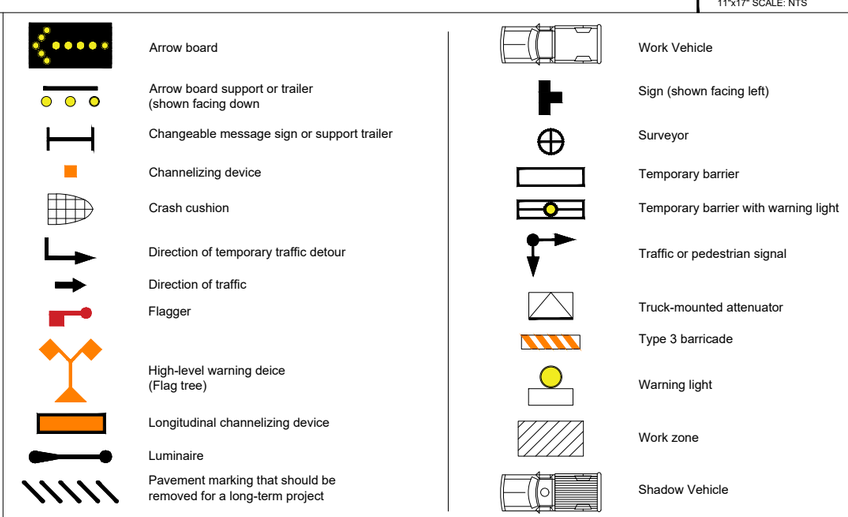

LEGEND 2

mobilitie
intelligent infrastructure

MOBILITIE, LLC

DRAWN BY:	O.T.
DATE:	08/08/2016

REV	DATE	DESCRIPTION	BY
A	08/08/2016	90% CONSTRUCTION	OT

PRELIMINARY NOT FOR CONSTRUCTION

IT IS A VIOLATION OF LAW FOR ANY PERSON, UNLESS THEY ARE ACTING UNDER THE DIRECTION OF A LICENSED PROFESSIONAL ENGINEER, TO ALTER THIS DOCUMENT.

SITE ID:
9WAX000691A
1200 GALAXY DR NE LACEY, WA 98516,
GALAXY DR NE & MARTIN WAY E

NEW STEEL UTILITY POLE

SHEET TITLE
TRAFFIC CONTROL PLAN

SHEET NUMBER
TC-2

Lacey, Washington

2 Proposed Transport Sites
1 Proposed Small Cell Site

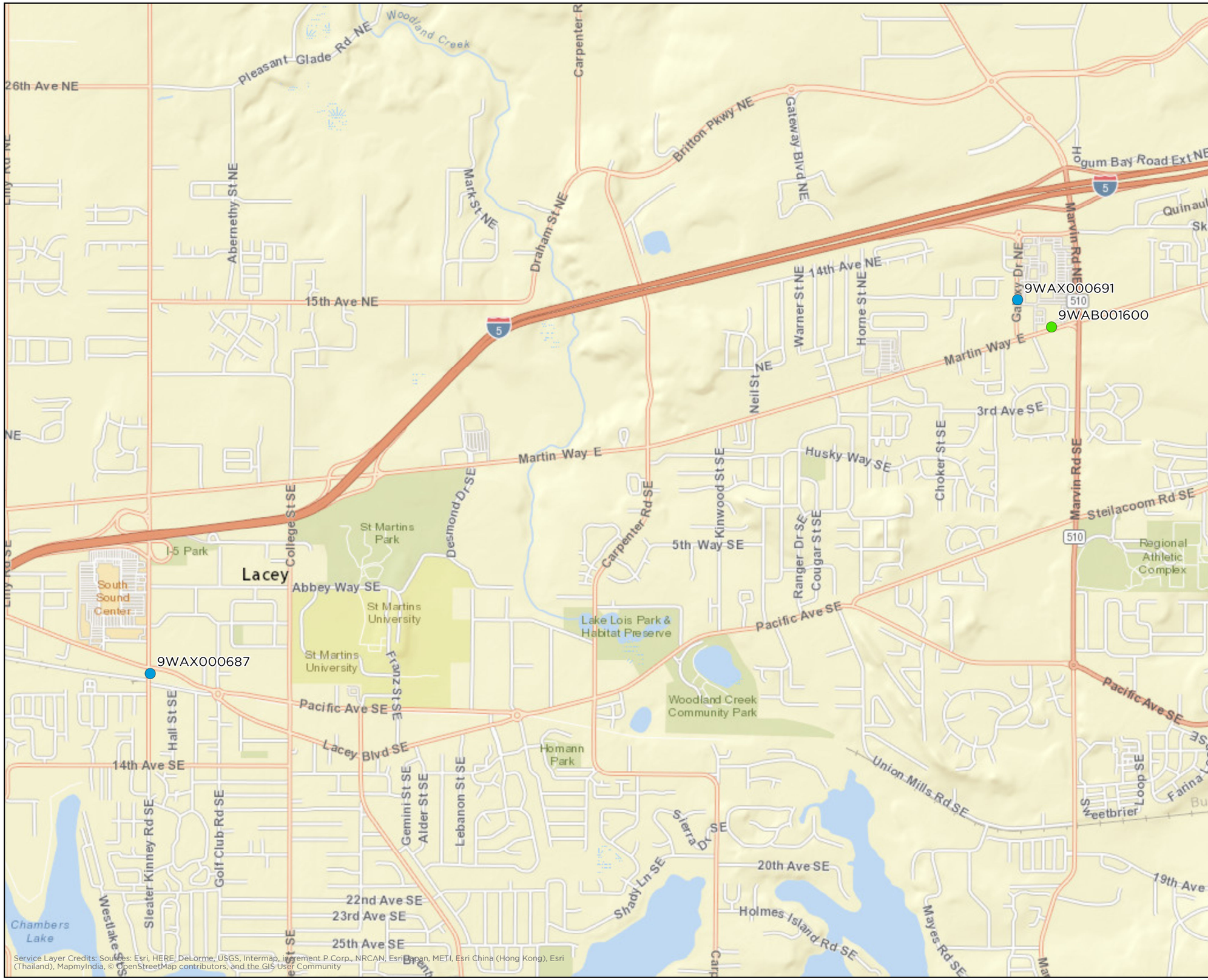

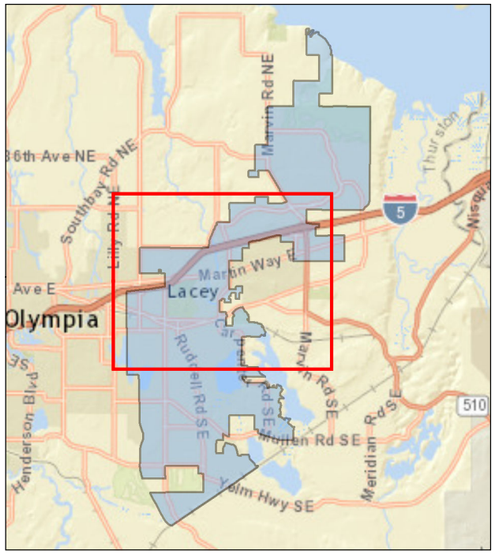

Transport Pole

New Small Cell Pole

N

0 0.5 1
Mile

Date Created: 9/12/2016

mobilitie®
intelligent infrastructure

MOBILITIE, LLC

PHOTO SIMULATION

FOR NEW MINI TRANSPORT SITE LOCATED AT:

8200 MARTIN WAY E. & MARVIN RD. NE | LACEY, WA 98516

SITE ID: 9WAB001600A

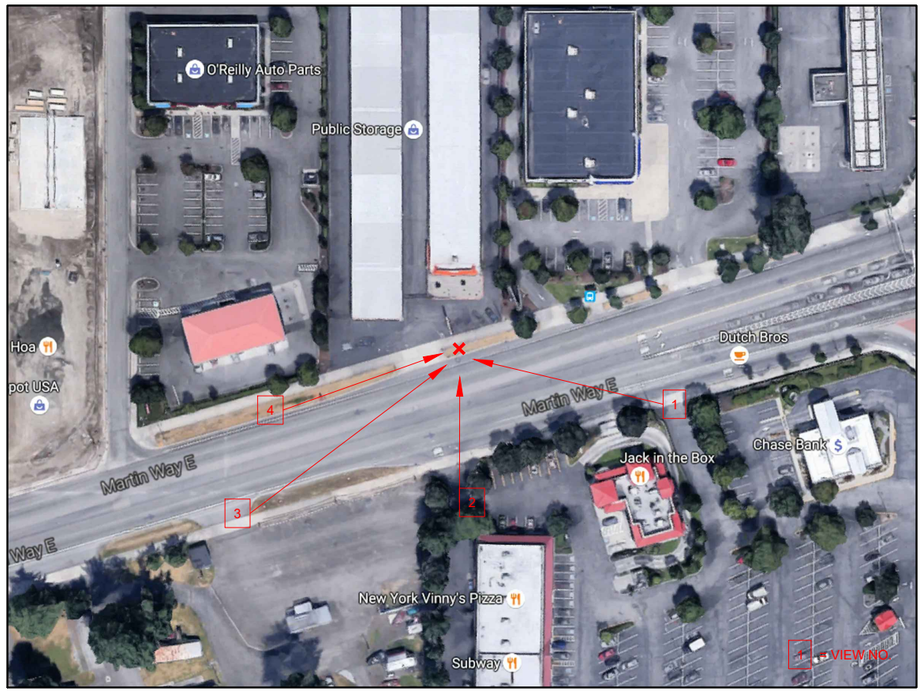

VICINITY MAP

© 2016 Google

PREVIEW

SITE DESCRIPTION:

NEW MINI TRANSPORT SITE WITHIN EXISTING RIGHT OF WAY

VIEWS: 4

SHEET INDEX

SHEET 2: VIEW 1
SHEET 3: VIEW 2
SHEET 4: VIEW 3
SHEET 5: VIEW 4

DATE: 08.11.16

Photo Simulation By:

Tangent SYSTEMS

424-262-4167 | tangentsystems.co

Photo Simulation

This photographic simulation is intended as a visual representation only and is not to be used for construction purposes. Accuracy of photo simulation is based on information provided by project applicant.

MOBILITIE, LLC

Site ID: 9WAB001600A

POLE TYPE: NEW WOOD UTILITY POLE

8200 MARTIN WAY E. & MARVIN RD. NE
LACEY, WA 98516

EXISTING VIEW

PROPOSED VIEW

DATE: 08.11.16

VIEW 1 - LOOKING NORTHWEST FROM MARTIN WAY E

SHEET: 2 / 5

Photo Simulation By:

Tangent SYSTEMS

424-262-4167 | tangentsystems.co

Photo Simulation

This photographic simulation is intended as a visual representation only and is not to be used for construction purposes. Accuracy of photo simulation is based on information provided by project applicant.

MOBILITIE, LLC

Site ID: 9WAB001600A

POLE TYPE: NEW WOOD UTILITY POLE

8200 MARTIN WAY E. & MARVIN RD. NE
LACEY, WA 98516

EXISTING VIEW

PROPOSED VIEW

DATE: 08.11.16

VIEW 2 - LOOKING NORTH FROM MARTIN WAY E

SHEET: 3 / 5

Photo Simulation By:

Tangent SYSTEMS

424-262-4167 | tangentsystems.co

Photo Simulation

This photographic simulation is intended as a visual representation only and is not to be used for construction purposes. Accuracy of photo simulation is based on information provided by project applicant.

MOBILITIE, LLC

Site ID: 9WAB001600A

POLE TYPE: NEW WOOD UTILITY POLE

8200 MARTIN WAY E. & MARVIN RD. NE
LACEY, WA 98516

EXISTING VIEW

PROPOSED VIEW

DATE: 08.11.16

VIEW 3 - LOOKING NORTHEAST FROM MARTIN WAY E

SHEET: 4 / 5

Photo Simulation By:

Tangent SYSTEMS

424-262-4167 | tangentsystems.co

Photo Simulation

This photographic simulation is intended as a visual representation only and is not to be used for construction purposes. Accuracy of photo simulation is based on information provided by project applicant.

MOBILITIE, LLC

Site ID: 9WAB001600A

POLE TYPE: NEW WOOD UTILITY POLE

8200 MARTIN WAY E. & MARVIN RD. NE
LACEY, WA 98516

EXISTING VIEW

PROPOSED VIEW

DATE: 08.11.16

VIEW 4 - LOOKING NORTHEAST FROM MARTIN WAY E

SHEET: 5 / 5

Photo Simulation By:

Tangent SYSTEMS

424-262-4167 | tangentsystems.co

Photo Simulation

This photographic simulation is intended as a visual representation only and is not to be used for construction purposes. Accuracy of photo simulation is based on information provided by project applicant.

MOBILITIE, LLC

Site ID: 9WAB001600A

POLE TYPE: NEW WOOD UTILITY POLE

8200 MARTIN WAY E. & MARVIN RD. NE
LACEY, WA 98516

MOBILITIE, LLC

PHOTO SIMULATION

FOR NEW TRANSPORT SITE LOCATED AT:

GALAXY DR NE & MARTIN WAY E | LACEY CITY, WA 98516

SITE ID: 9WAX000691A

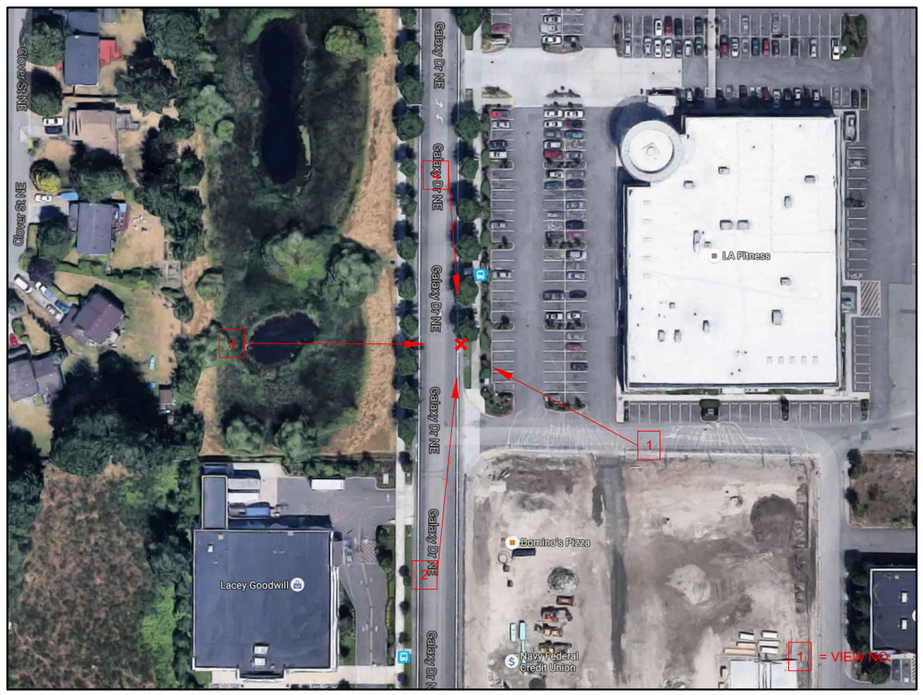

VICINITY MAP

© 2016 Google

PREVIEW

SITE DESCRIPTION:

NEW TRANSPORT SITE WITHIN EXISTING RIGHT OF WAY

VIEWS: 4

SHEET INDEX

SHEET 2: VIEW 1
SHEET 3: VIEW 2
SHEET 4: VIEW 3
SHEET 5: VIEW 4

DATE: 08.11.16

Photo Simulation By:

Tangent SYSTEMS

424-262-4167 | tangentsystems.co

Photo Simulation

This photographic simulation is intended as a visual representation only and is not to be used for construction purposes. Accuracy of photo simulation is based on information provided by project applicant.

MOBILITIE, LLC

Site ID: 9WAX000691A

POLE TYPE: NEW STEEL UTILITY POLE

GALAXY DR NE & MARTIN WAY E
LACEY CITY, WA 98516

EXISTING VIEW

PROPOSED VIEW

DATE: 08.11.16

VIEW 1 - LOOKING NORTHWEST FROM LA FITNESS PARKING

SHEET: 2 / 5

Photo Simulation By:

Tangent SYSTEMS

424-262-4167 | tangentsystems.co

Photo Simulation

This photographic simulation is intended as a visual representation only and is not to be used for construction purposes. Accuracy of photo simulation is based on information provided by project applicant.

MOBILITIE, LLC

Site ID: 9WAX000691A

POLE TYPE: NEW STEEL UTILITY POLE

GALAXY DR NE & MARTIN WAY E
LACEY CITY, WA 98516

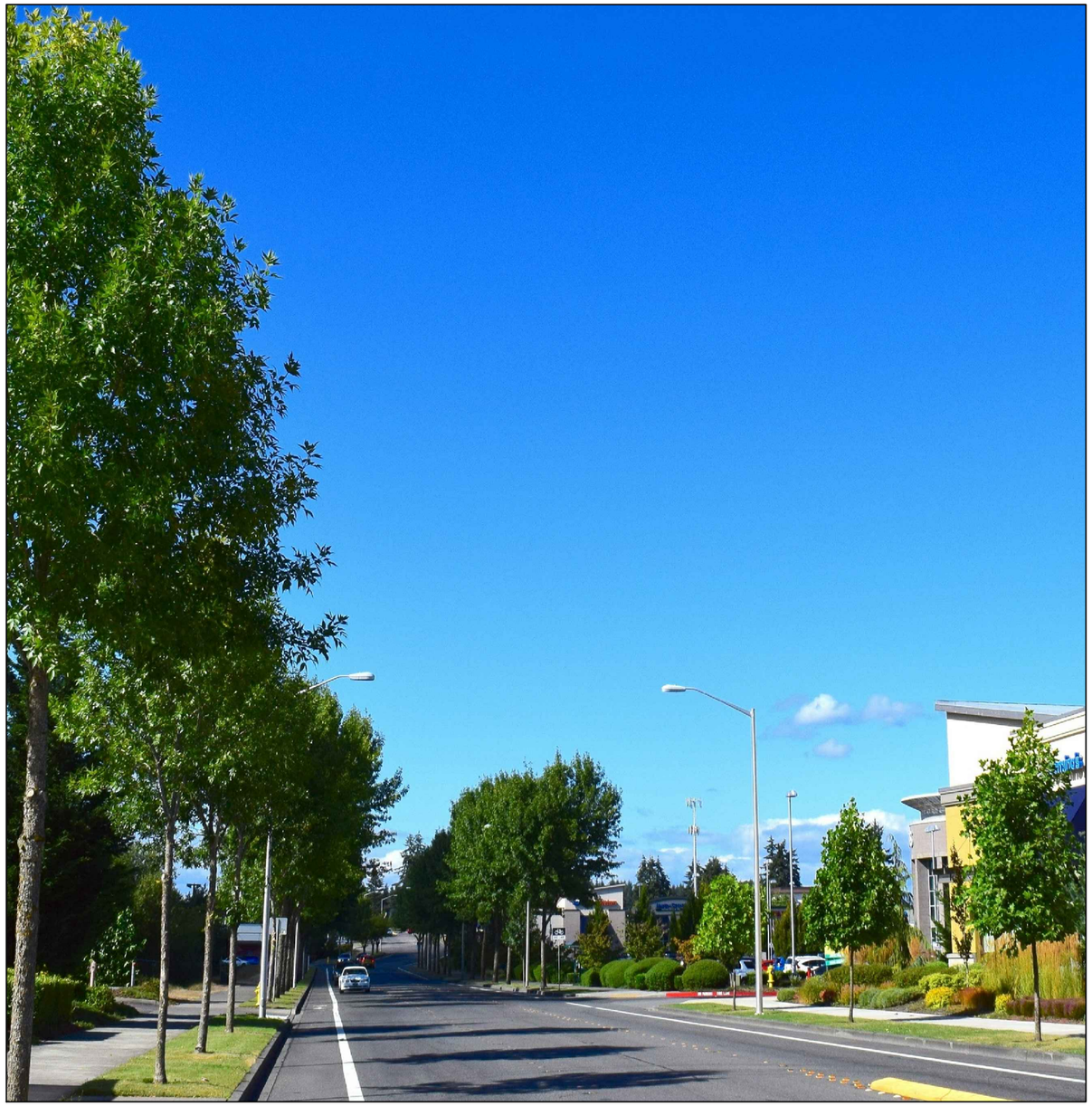

EXISTING VIEW

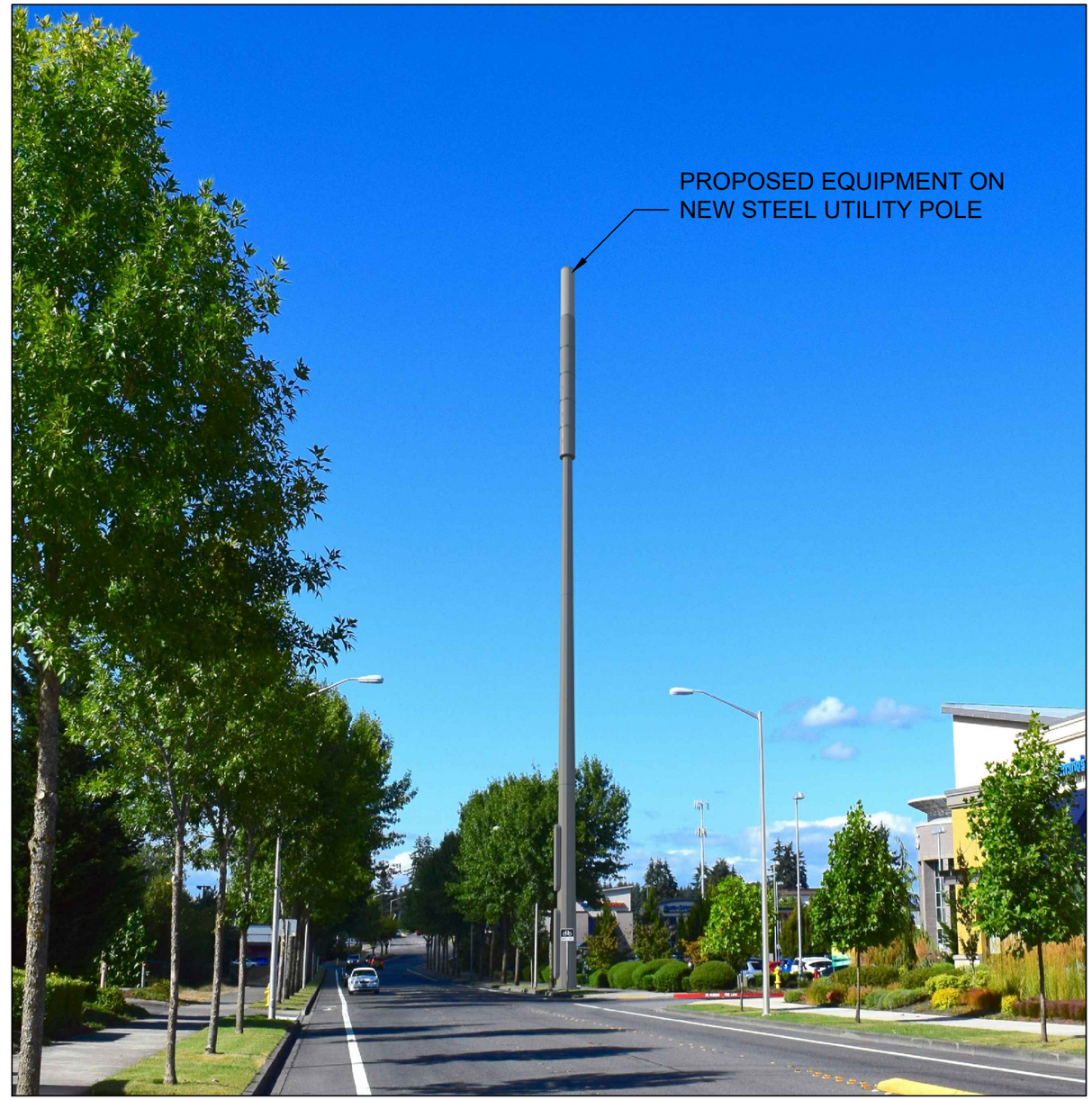

PROPOSED VIEW

DATE: 08.11.16

VIEW 2 - LOOKING NORTH FROM GALAXY DR NE

SHEET: 3 / 5

Photo Simulation By:

Tangent SYSTEMS

424-262-4167 | tangentsystems.co

Photo Simulation

This photographic simulation is intended as a visual representation only and is not to be used for construction purposes. Accuracy of photo simulation is based on information provided by project applicant.

MOBILITIE, LLC

Site ID: 9WAX000691A

POLE TYPE: NEW STEEL UTILITY POLE

GALAXY DR NE & MARTIN WAY E
LACEY CITY, WA 98516

EXISTING VIEW

PROPOSED VIEW

DATE: 08.11.16

VIEW 3 - LOOKING EAST FROM 13TH AVENUE

Photo Simulation By:

Tangent SYSTEMS

424-262-4167 | tangentsystems.co

Photo Simulation

This photographic simulation is intended as a visual representation only and is not to be used for construction purposes. Accuracy of photo simulation is based on information provided by project applicant.

MOBILITIE, LLC

Site ID: 9WAX000691A

POLE TYPE: NEW STEEL UTILITY POLE

GALAXY DR NE & MARTIN WAY E
LACEY CITY, WA 98516

EXISTING VIEW

PROPOSED VIEW

DATE: 08.11.16

VIEW 4 - LOOKING SOUTH FROM GALAXY DR NE

SHEET: 5 / 5

Photo Simulation By:

Tangent SYSTEMS

424-262-4167 | tangentsystems.co

Photo Simulation

This photographic simulation is intended as a visual representation only and is not to be used for construction purposes. Accuracy of photo simulation is based on information provided by project applicant.

MOBILITIE, LLC

Site ID: 9WAX000691A

POLE TYPE: NEW STEEL UTILITY POLE

GALAXY DR NE & MARTIN WAY E
LACEY CITY, WA 98516